ICG
Industrial Climatic Group

LIGHT LINE

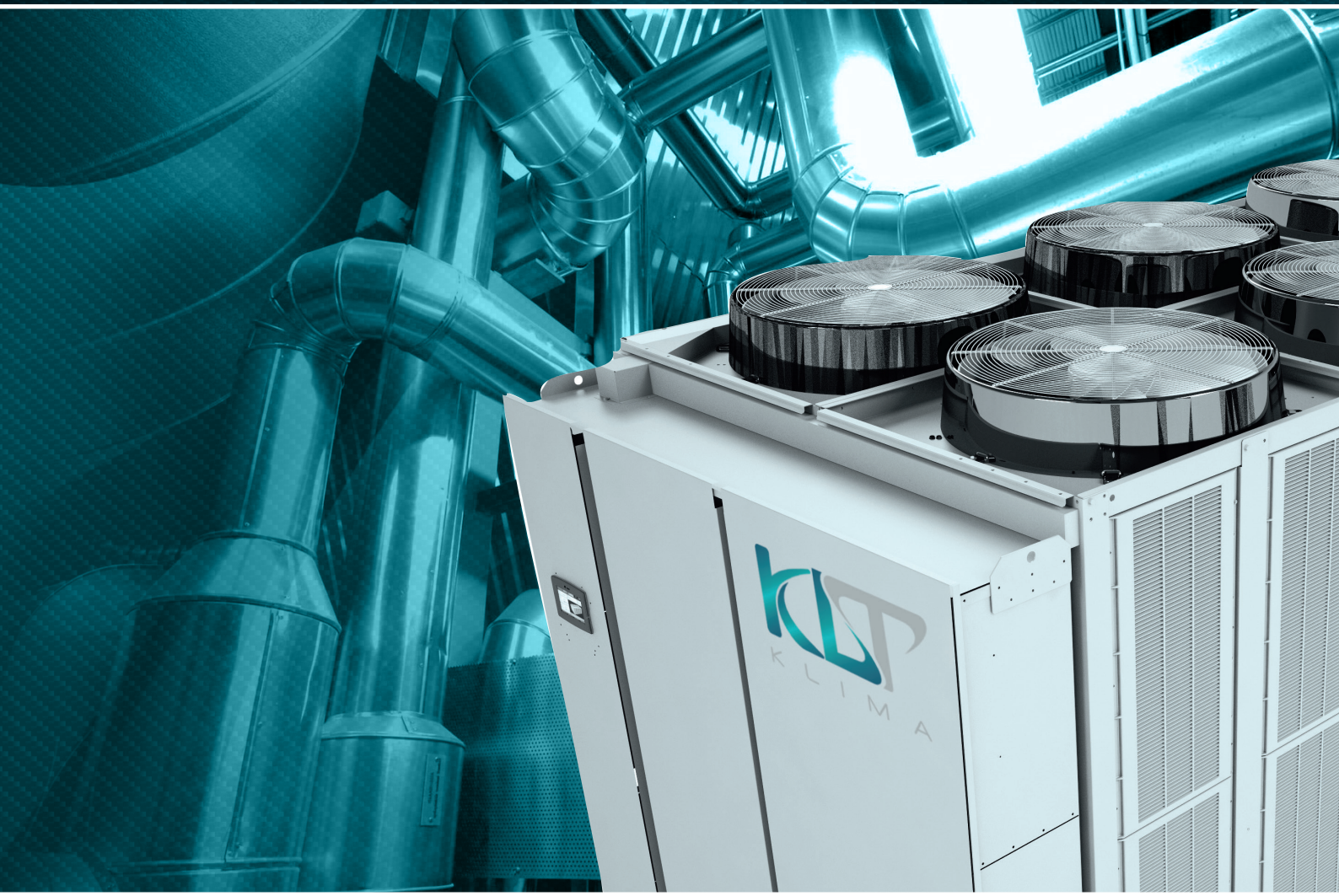

Chillers and Heat Pumps

KLT
KLIMA

MAIN INDEX

AIR COOLED CHILLERS AND HEAT PUMPS



GELIX
4 - 10 kW
Full Inverter Air/Water heat pump
PAGE 06



TORMEX STD
4 - 11 kW
Split type air to water heat pumps
- Wall mounted version
PAGE 12



TORMEX FLR
4 - 10 kW
Split type air to water heat pumps
- Floor mounted version
PAGE 18



ALITEX
24 kW
Modular reversible air to water heat pumps
PAGE 26



ALISEA STD/SLN
40 - 170 kW
High efficiency air cooled water chillers
PAGE 32

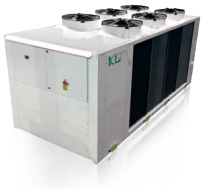

ALISEA PLUS STD/SLN
4 - 10 kW
High efficiency air cooled water chillers
PAGE 36



ALISEA FC
54 - 165 kW
High efficiency air cooled FREECOOLING chillers
PAGE 42



EOLIX
48 - 202 kW
Air cooled reversible heat pumps
PAGE 48



ALISEA PLUS STD/SLN
190 - 318 kW
Air cooled reversible heat pumps
PAGE 52



ALISEA MCS
190 - 318 kW
Air cooled reversible heat pumps
PAGE 62



BWR
13 - 75 kW
Air cooled water chillers
- indoor wersions
PAGE 64



BWE
5 -75 kW
Condenserless chillers
PAGE 68

WATER COOLED CHILLERS AND HEAT PUMPS



RIVIERA
5-86 kW
Water cooled chillers -
Well water version
PAGE 74



RIVIERA – H HE
5-93 kW
Water cooled heating only heat pumps
PAGE 82

MAIN INDEX

BUFFER TANKS AND PUMPING GROUPS



NATISSA

Vertical/horizontal buffer tank

PAGE 88



CELLINA

Buffer tanks hot/cold

PAGE 90



SOANNA

Pumping group and buffer tank

PAGE 92



BRENTA

Boilers for DHW with high heat exchanger

PAGE 98



FIASTRA

Comby boiler for DHW

PAGE 102



TENNA

Combined tanks for hot sanitary water production

PAGE 106

KEY TO SYMBOLS

A — Energetic class A	Axial fan	DHW production
A+ — Energetic class A+	Centrifugal fan	R407C — Refrigerant R407C
A++ — Energetic class A++	Scroll compressor	R410A — Refrigerant R410A
Cooling capacity	DCI — Inverter compressor	Indoor instalation
Heating capacity	Screw compressor	Outdoor instalation
P — Brazed plate heat exchanger		

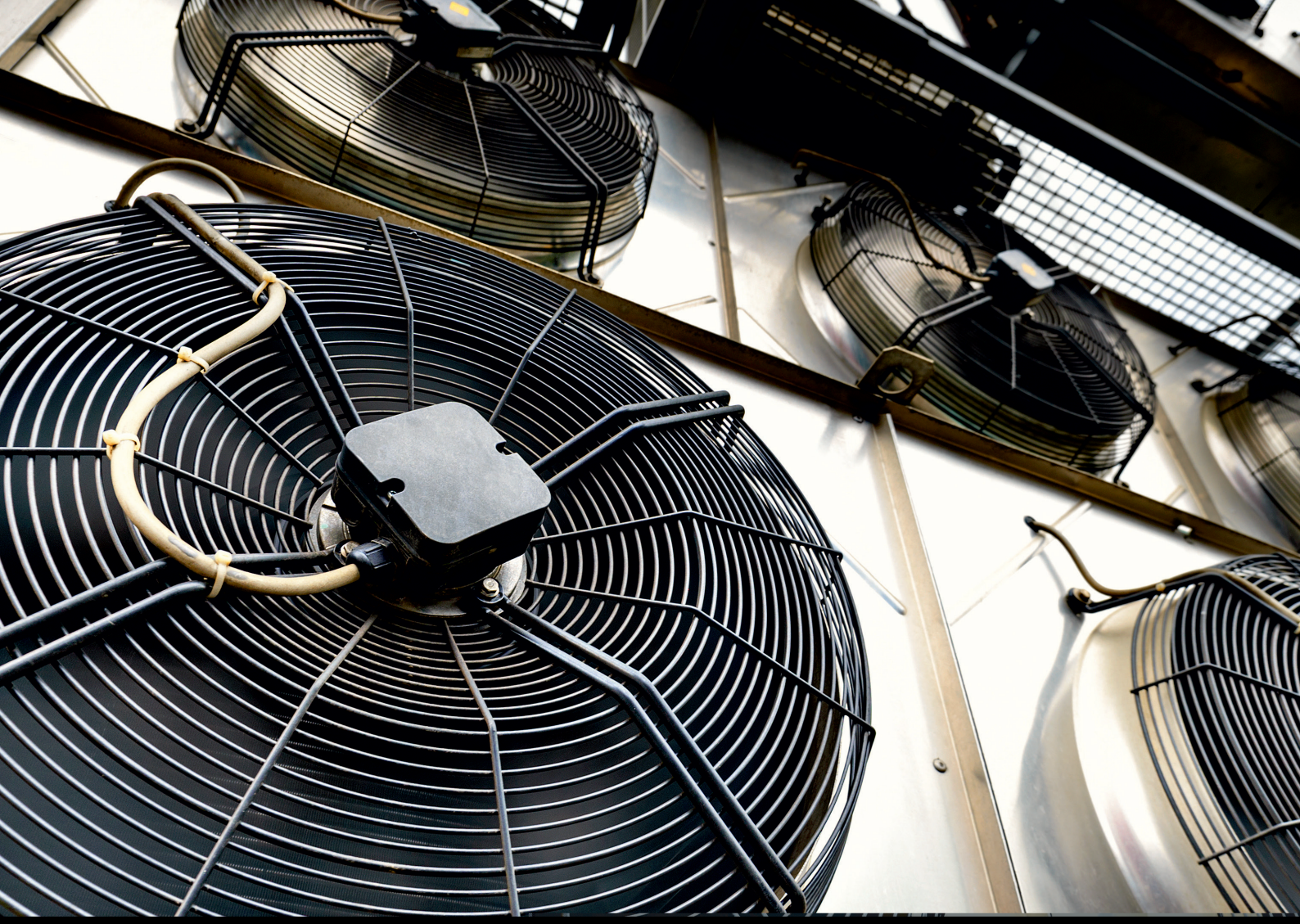

AIR COOLED CHILLERS AND HEAT PUMPS

GELIX PAGE 06

TORMEX STD PAGE 12

TORMEX FLR PAGE 18

ALITEX PAGE 26

ALISEA PAGE 32

ALISEA PLUS PAGE 36

ALISEA FC PAGE 42

EOLIX PAGE 48

EOLIX PLUS PAGE 52

ALISEA MCS PAGE 62

BWR PAGE 64

BWE PAGE 68

GELIX

FULL INVERTER AIR/WATER HEAT PUMPS

Hc kW 5,7 ÷ 14,1

Cc kW 4,1 ÷ 10,5

- **A++ high-efficiency single unit**
- **R410a full inverter**
- **Compact dimensions**
- **Inertial storage option**
- **Able to produce DHW**
- **Integral boiler function control**

MADE IN ITALY



DCINVERTER



PRODUCT FEATURES

The Gelix one piece heat pumps series are designed for applications in residential and commercial areas, These units are extremely versatile and can operate in heat pump mode with the ability of producing hot water at a temperature of 55°C for environmental heating and sanitary applications. The INVERTER compressor with brushless DC motor technology, matched with electronic expansion valve, pump and variable speed blower are generally used for optimizing the power consumption and efficient operation of the refrigerating components.

All Gelix units are made up of hot-galvanised thick sheet metal, painted with polyurethane. The used DC inverter compressors are a rotary hermetic type (for 06 and 09 models) and twin rotary (for the 12 and 15 models) designed to be used with R410 refrigerant. The fans are axial type with plastic aerofoil blades and the electric motors are all brushless DC type with 8 poles (about 200/1000 rpm). The Gelix units are supplied with an integrated hydraulic circuit including the circulating pump, suitable for hot and chilled water utilization and directly managed by the controller on board. The circulation pump is always modulating type, it adopts motor DC brushless for GELIX models.

Available in two versions: STD **WITH** 4 way user side valve
E **WITHOUT** 4 way user side valve

BOILER MODELS	GELIX	06	09	12	15
D.h.w. tank volume suggested (liters)	BRENTA	200	200	200/300	300
	TENNA	N / A	N / A	600	600

ACCESORIES

GELIX			06 E	06	09 E	09	12 E	12	15 E	15
	Energetic class	Units of measure	A++		A++		A++		A++	
Electrical data	Power supply	V/Ph/Hz	230V/1/50		230V/1/50		230V/1/50		400V/3P+N+T/50	
	Max power input	kW	2,76		4,55		5,67		7,85	
	Maximum current at start	A	7,8		12,9		16,1		7,3	
	Max current input	A	12,1		20,0		24,9		11,3	
Cooling	Cooling capacity (2)	kW	2,46-5,09 (*5,57)	2,59-5,37 (*5,84)	4,42-8,31 (*8,91)	4,68-8,79 (*9,42)	4,88-11,57 (*12,44)	5,16-12,23 (*13,15)	6,48-13,17 (*14,73)	6,87-13,95 (*15,60)
	Power input(2)	kW	1,27	1,32	2,20	2,22	2,88	2,94	3,44	3,46
	E.E.R. (2)	W/W	4,02	4,06	3,78	3,96	4,01	4,16	3,83	4,03
	Cooling capacity (1)	kW	1,77-3,92 (*4,41)	1,87-4,13 (*4,65)	3,21-6,14 (*7,57)	3,39-6,49 (*7,90)	3,50-7,76 (10,10)	3,71-8,20 (*10,40)	4,58-9,92 (*12,10)	4,86-10,51 (*12,60)
	Power input(1)	kW	1,28	1,33	2,06	2,08	2,60	2,65	3,37	3,39
	E.E.R. (1)	W/W	3,07	3,11	2,97	3,12	2,98	3,10	2,94	3,10
	ESSER. (5)	W/W	6,20	6,29	5,78	6,05	6,15	6,37	5,98	6,28
Heating	Heating capacity (3)	kW	2,60-5,77 (*6,20)		4,72-9,06 (*9,90)		5,09-12,40 (*13,19)		6,62-14,16 (*15,82)	
	Power input(3)	kW	1,39		2,21		2,95		3,45	
	C.O.P. (3)	W/W	4,15		4,11		4,21		4,11	
	Heating capacity (4)	kW	2,46-5,46 (*5,78)		4,48-8,80 (*9,28)		4,81-11,66 (*12,43)		6,21-13,75 (*14,50)	
	Power input(4)	kW	1,63		2,67		3,41		4,25	
	C.O.P. (4)	W/W	3,34		3,30		3,42		3,24	
	SCOP (6)	W/W	3,84		3,83		3,84		3,83	
Compressor	TYPE		Single Rotary DC inverter		Twin Rotary DC inverter		Twin Rotary DC inverter		Twin Rotary DC inverter	
	Number		1		1		1		1	
	Cooling power input (1)	kW	1,20		2,04		2,66		3,12	
	Cooling power input (2)	kW	1,20		1,91		2,38		3,06	
	Heating power input (3)	kW	1,24		2,01		2,72		3,10	
	Heating power input (4)	kW	1,48		2,47		3,18		3,89	
	Refrigerant oil (type, quantity)	ml.	ESTER OIL VG74, 480		ESTER OIL VG74, 820		FV50S, 1070		FV50S, 1400	
Engine fan	TYPE		DC brushless Motor		DC brushless Motor		Motore DC brushless		Motore DC brushless	
	Number		1		1		2		2	
	Nominal power input	kW	0,156		0,188		0,144 (x2)		0,180 (x2)	
	Nominal current input	A	0,68		0,82		0,63 (x2)		0,79 (x2)	
	Speed	r/min	900		900		800		1000	
	Max air flow	m³/s	1,08		1,63		2,11		2,59	
Refrigerant	TYPE		R410A		R410A		R410A		R410A	
	Refrigerant quantity	Kg	1,55		2,10		3,65		3,90	
	Design pressure (high / low)	MPa	4,2/2,7		4,2/2,7		4,2/2,7		4,2/2,7	
Hydraulic circuit	Water flow (3)	m³/h	0,99		1,56		2,13		2,44	
	Available head (3)	kPa	56,4	55,5	33,4	31,0	46,2	41,7	38,0	32,1
	Pump nominal power (3)	kW	0,063		0,063		0,087		0,087	
	Pump max power	kW	0,063		0,063		0,087		0,087	
	Pump max current input	A	0,47		0,47		0,71		0,71	
	Circulation pump Energy Efficiency Index (EEI)		≤ 0,23		≤ 0,23		≤ 0,23		≤ 0,23	
	Expansion vessel	L	2		2		2		2	
	Hydraulic connections		1"M		1"M		1"M		1"M	
	Minimum water volume	L	18		25		35		45	
	Maximum water volume	L	85		85		85		85	
Noise	Sound pressure (7)	dB(A)	44÷50		45÷53		46÷54		46÷54	
Sizes and weight	Sizes (WxHxD)	mm	1135x717x360		1216x864x370		1260x1400x 448		1260x1400x 448	
	Packaging max size (WxHxD)	mm	1310x850x430		1310x1000x 430		1430x1546x 690		1430x1546x 690	
	Operating weight	Kg	75		94		149		154	
	Net / Gross weight	Kg	71/79		89/98		142/155		147/160	

Performance refers to the following conditions:
(1) Cooling: outside air temperature 35°C; inlet/outlet water temperature 12/7°C.
(2) Cooling: outside air temperature 35°C; inlet/outlet water temperature 23/18°C.
(3) Heating: outside air temperature 7°C b.s. 6°C dry bulb; inlet/outlet water temperature 30/35°C.
(4) Heating: outside air temperature 7°C b.s. 6°C dry bulb; inlet/outlet water temperature 40/45°C.
(5) Cooling: inlet/outlet water temperature 23/18°C.
(6) Heating: in average climate conditions; Tbiv: =-7°C; inlet/outlet water temperature 30/35°C.
(7) Sound pressure level measured in free field conditions at 1m from the unit, according to ISO 3744.

TECHNICAL DATA

ACCESSORIES



Anti-vibration mount feet (AVF)

for models:	06	09	12	15



Wall thermostat for fancoils

for models:	06	09	12	15



Kit valve 3 ways (K3V)

for models:	06	09	12	15



Bus adapter+ thermostat box for fancoils (BT)

for models:	06	09	12	15



Base Remote control (BRC)

for models:	06	09	12	15



D.h.w. integration electric heater 2kW single-phase (factory fitted)

for models:	06	09	12	



Multifunctioning touch (BRC TOUCH)

for models:	06	09	12	15



D.h.w. integration electric heater 4.5kW three-phase (factory fitted)

for models:				15

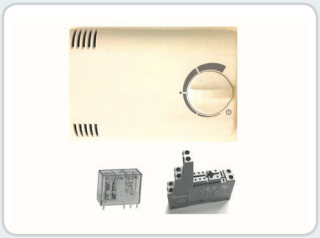

Kit doppio set point (KSP)

for models:	06	09	12	15

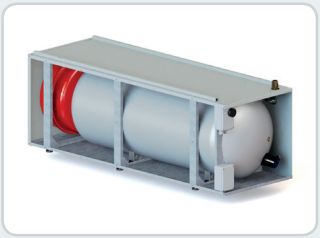

50 litre technical water buffer tank (factory fitted)

for models:	06	09	12	15



Bus adapter for fancoils

for models:	06	09	12	15



18 litre 2kW expansion vessel (factory fitted)

for models:	06	09	12	15

GELIX 06

IN/OUT: 1"M

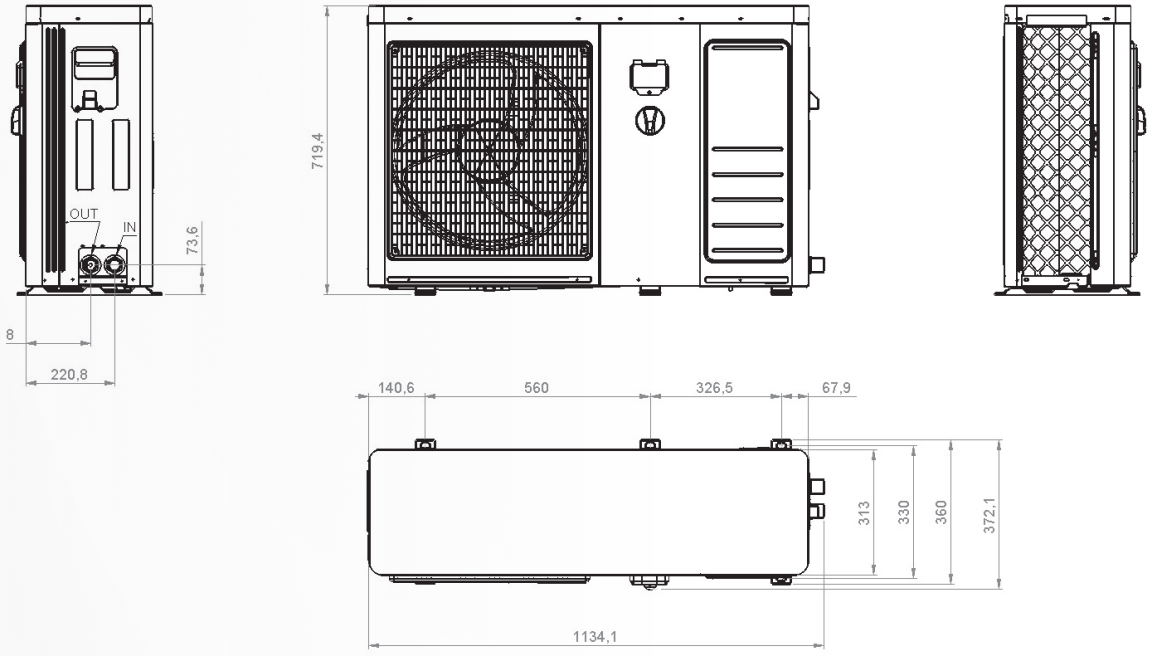

GELIX 09

IN/OUT: 1"M

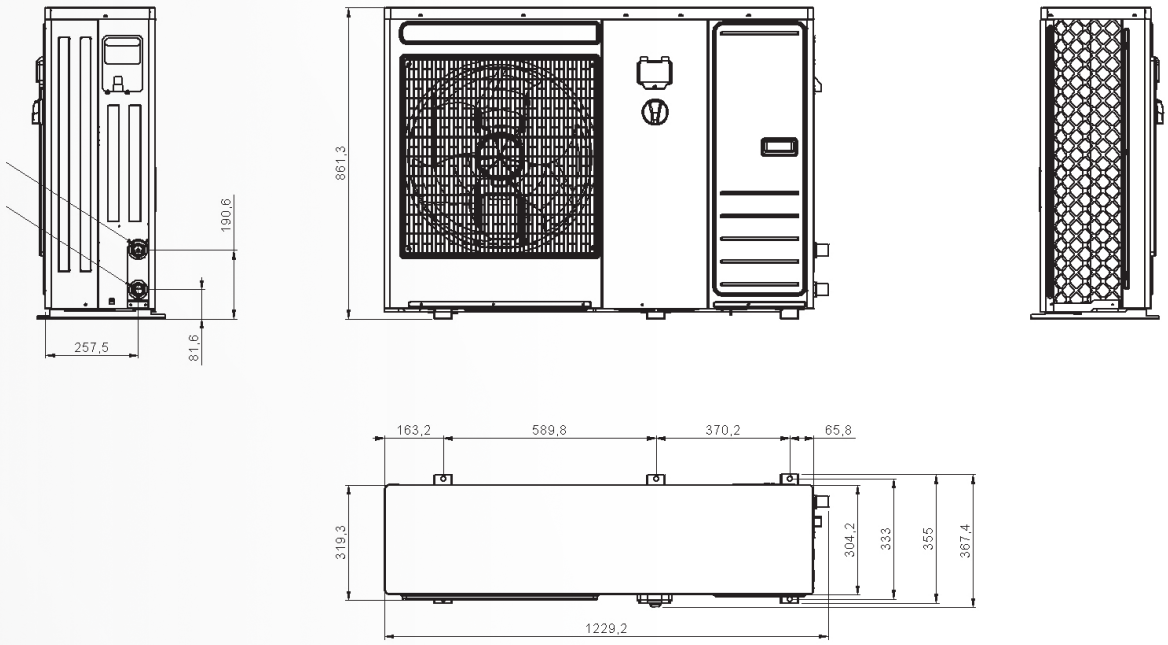

GELIX

TECHNICAL DRAWINGS

GELIX 12+15

IN/OUT: 1"M

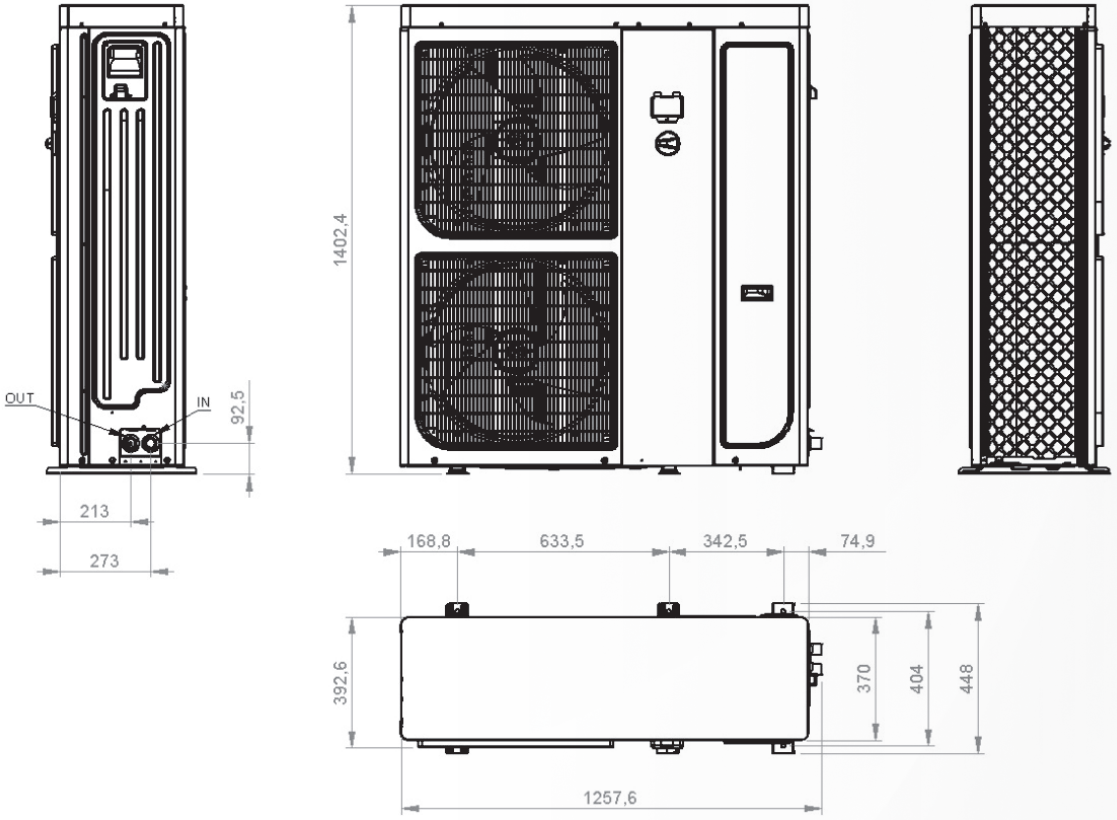

CENTRAL HEAT AND DISTRIBUTION PLAN

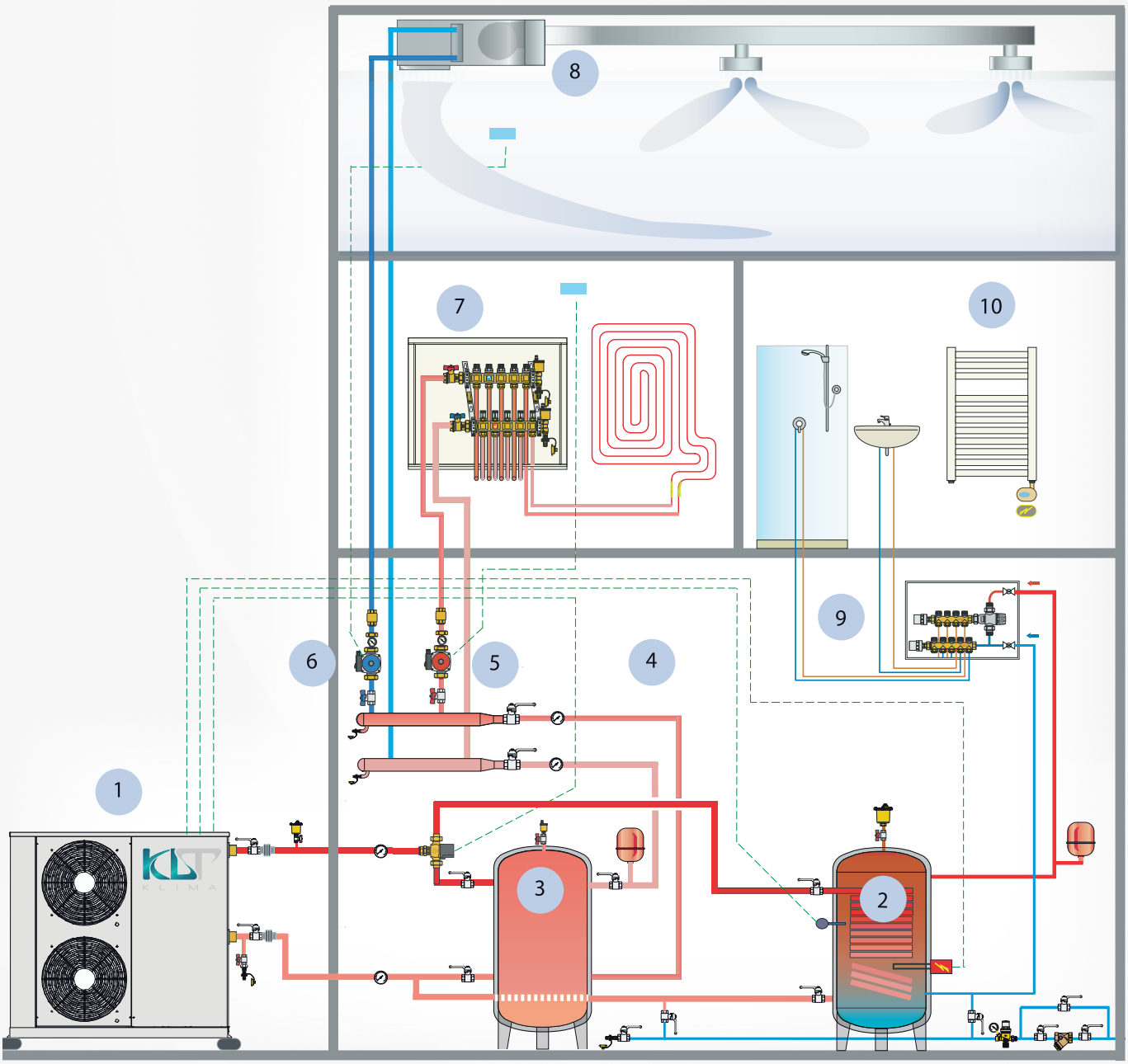

LEGEND

1. Full inverter air/water heat pumps GELIX
2. technical water buffer tank with heat exchanger BRENTA
3. User plant side buffer tank CELLINA
4. Hydraulic equaliser
5. Circulation pump radiating A zone power
6. Circulation pump radiating B zone power
7. A zone radiant distribution header
8. B zone radiant distribution header
9. D.h.W.. distribution header with thermostatic valve
10. Electric towel rail

TORMEX STD

SPLIT TYPE AIR TO WATER HEAT PUMPS – WALL MOUNTED VERSION

Hc kW 5,7 ÷ 14,1

Cc kW 4,1 ÷ 10,5

- **A++ high-efficiency floor-mounted inverter unit**
- **R410a full inverter**
- **Compact dimensions**
- **Able to produce DHW**
- **Integral boiler function control**

MADE IN ITALY

Indoor unit STD



DCINVERTER

TORMEX 12-15
Outdoor unit



TORMEX 06-09
Outdoor unit



PRODUCT FEATURES

The Tormex water chillers and heat pumps series are designed for applications in residential and commercial areas, these units are extremely versatile and can operate in heat pump mode with the ability of producing hot water at a temperature of 58°C for environmental heating and sanitary applications. The INVERTER compressor with brushless DC motor technology, matched with electronic expansion valve, pump and variable speed blower are generally used for optimizing the power consumption and efficient operation of the refrigerating components. All Tormex units are made up of hotgalvanised thick sheet metal, painted with polyurethane. The used DC inverter compressors are a rotary hermetic type (for 06 and 09 models) and twin rotary (for the 12 and 15 models), designed to be used with R410 refrigerant.

The fans are axial type with plastic aerofoil blades and the electric motors are all brushless DC type with 8 poles (about 200/1000 rpm). The Tormex chillers units are supplied with an integrated hydraulic circuit including the circulating pump, suitable for chilled water utilization and directly managed by the controller on board of internel unit. The circulation pump is always modulating type, it adopts motor DC brushless for Tormex models.

BOILER MODELS	Tormex	06	09	12	15
D.h.w. tank volume suggested (liters)	Fiastra	2002	00	200/300	300
	AICS	N / AN	/ A	600	600

TORMEX	PERFORMANCE DATA		06	09	12	15
	Energetic class		A++	A++	A++	A++
Cooling	Cooling capacity (1)	kW	2,4-4,71	4,3-8,12	4,5-9,03	6,9-10,82
	Power input (1)	kW	1,52	1,96	2,90	3,49
	E.E.R. (1)	W/W	3,10	3,11	3,11	3,1
	Cooling capacity (2)	kW	3,5-6,12	4,3-8,12	6,02-11,9	9,0-14,07
	Power input (2)	kW	1,61	2,13	3,12	3,7
	E.E.R. (2)	W/W	3,8	3,81	3,82	3,8
Heating	Heating capacity (3)	kW	3,2-5,44	3,9-7,44	6,0-11,98	7,5-14,10
	Power input (3)	kW	1,70	2,32	3,72	4,35
	C.O.P. (3)	W/W	3,2	3,21	3,22	3,24
	Heating capacity (4)	kW	3,8-5,9	4,05-8,01	6,9-12,58	8,5-14,95
	Power input (4)	kW	1,44	1,95	3,05	3,64
	C.O.P. (4)	W/W	4,1	4,11	4,12	4,10

Performance refers to the following conditions:
(1) Cooling: outside air temperature 35°C; inlet/outlet water temperature 12/7°C.
(2) Cooling: outside air temperature 35°C; inlet/outlet water temperature 23/18°C.
(3) Heating: outside air temperature 7°C b.s. 6°C dry bulb; inlet/outlet water temperature 40/45°C.
(4) Heating: outside air temperature 7°C b.s. 6°C dry bulb; inlet/outlet water temperature 30/35°C.
N.B. the technical data is indicative and is subject to variation. Furthermore the data stated in points (1), (2), (3) and (4) is to be considered as the instantaneous performance according to EN 14511

TORMEX	INDOOR UNITS		06	09	12	15
	Energetic class		A++	A++	A++	A++
Electrical data	Power supply	V/Ph/Hz	230V/1/50 (single-phase model)			400V/3P+N+T/50
	Max power input	kW	0,13	0,13	0,13	0,13
	Max current input	A	0,58	0,58	0,58	0,58
Hydraulic circuit	Water flow (4)	m³/h	0,97	1,53	2,11	2,39
	Available head (4)	kPa	56	44	28	20
	Pump max power	kW	0,13	0,13	0,13	0,13
	Pump max current input	A	0,58	0,58	0,58	0,58
	Expansion vessel	L	10	10	10	10
	Hydraulic connections		1"M	1"M	1"M	1"M
	Minimum water volume	L	18	25	35	45
	Maximum water volume	L	350	350	350	350
Refrigerant circuit	Liquid side connections		1/4" SAE	3/8" SAE	3/8" SAE	3/8" SAE
	Gas side connections		1/2" SAE	5/8" SAE	5/8" SAE	5/8" SAE
Sizes and weight	Sizes (WxHxD)	mm	314x893x343	314x893x343	314x893x343	314x893x343
	Weight without package	Kg	34	34	34	34
	Weight with package	Kg	37	37	37	37

(4) Heating: outside air temperature 7°C b.s. 6°C dry bulb; inlet/outlet water temperature 30/35°C
The electrical data of the external and internal unit are indicated in order to calculate the size of the circuit breakers and the electrical connections.
It is necessary to add the power input of the internal and external units and any eventual electrical resistors.

WARNING: the minimum temperatures allowed for the stocking of the unit is +5°C

TECHNICAL DATA

ACCESSORIES



Anti-vibration mount feet (AVF)

for models:	06	09	12	15



Wall thermostat for fancoils

for models:	06	09	12	15



Kit valve 3 ways (K3V)

for models:	06	09	12	15



Bus adapter+ thermostat box for fancoils (BT)

for models:	06	09	12	15



Multifunctioning touch (BRC TOUCH)

for models:	06	09	12	15



D.h.w. integration electric heater 2kW single-phase (factory fitted)

for models:	06	09	12	



Bus adapter for fancoils

for models:	06	09	12	15



D.h.w. integration electric heater 4.5kW three-phase (factory fitted)

for models:				15

OUTDOOR UNIT

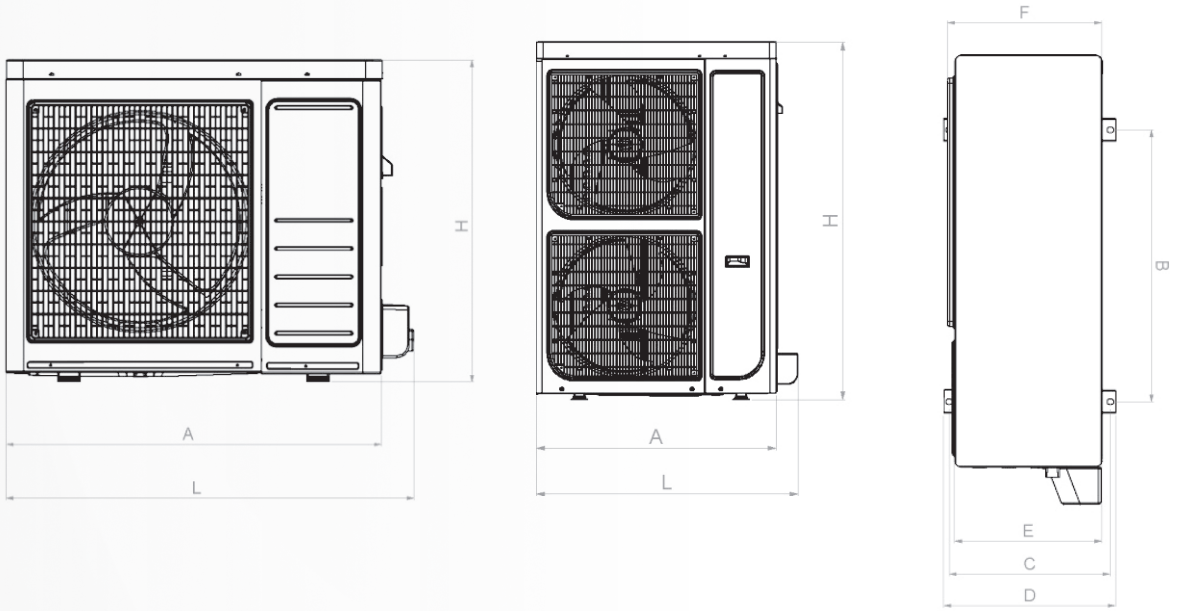

Models / Sizes		A	B	C	D	E	F	H	I	L
06	mm	844	560	330	360	313	329	719	379	916
09	mm	895	590	333	355	304	319	861	374	975
12-15	mm	940	633	404	448	370	392	1.402	424	1.024

TORMEX STD

TECHNICAL DRAWINGS

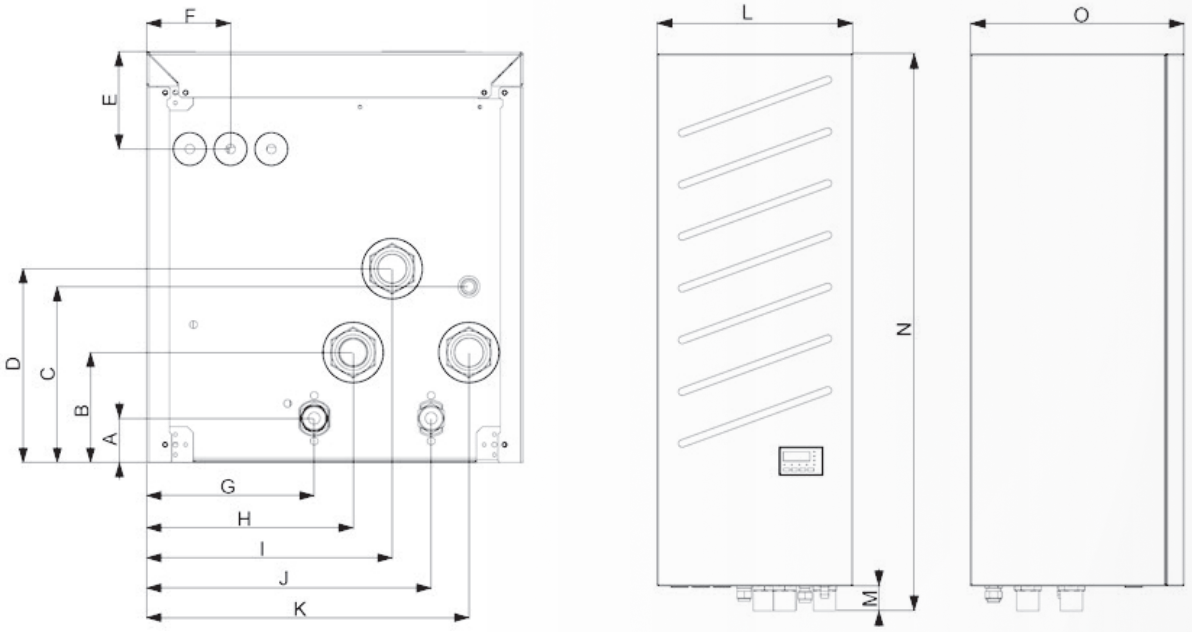

Model \ Sizes. (mm)	A	B	C	D	E	F	G	H	I	J	K	L	M	N	O
06-09-12-15	37	92	147	162	81	70	140	172	205	237	269	450	43	893	343

INDOOR WALL UNITS COMPONENTS

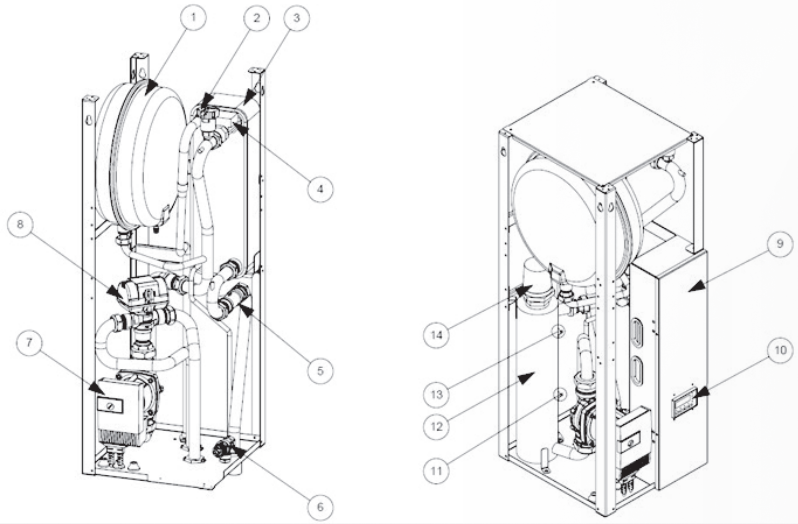

LEGEND

1. Expansion vessel
2. Automatic air purge valve,
3. Brazed plate exchanger
4. Saafety flow switch
5. Water filter
6. 3 bar safety valve
7. Circulation pump
8. User plant switch valve/DHW technical side (kit K3V opt.)
9. Electrical control panel
10. User interface
11. Automatic reset safety thermostat (T80°C)
12. Manifold (only with optional electrical resistance)
13. Automatic reset safety thermostat (T100°C)
14. Electrical resistance (optional)

TORMEX STD

TYPE HYDRAULIC DIAGRAM

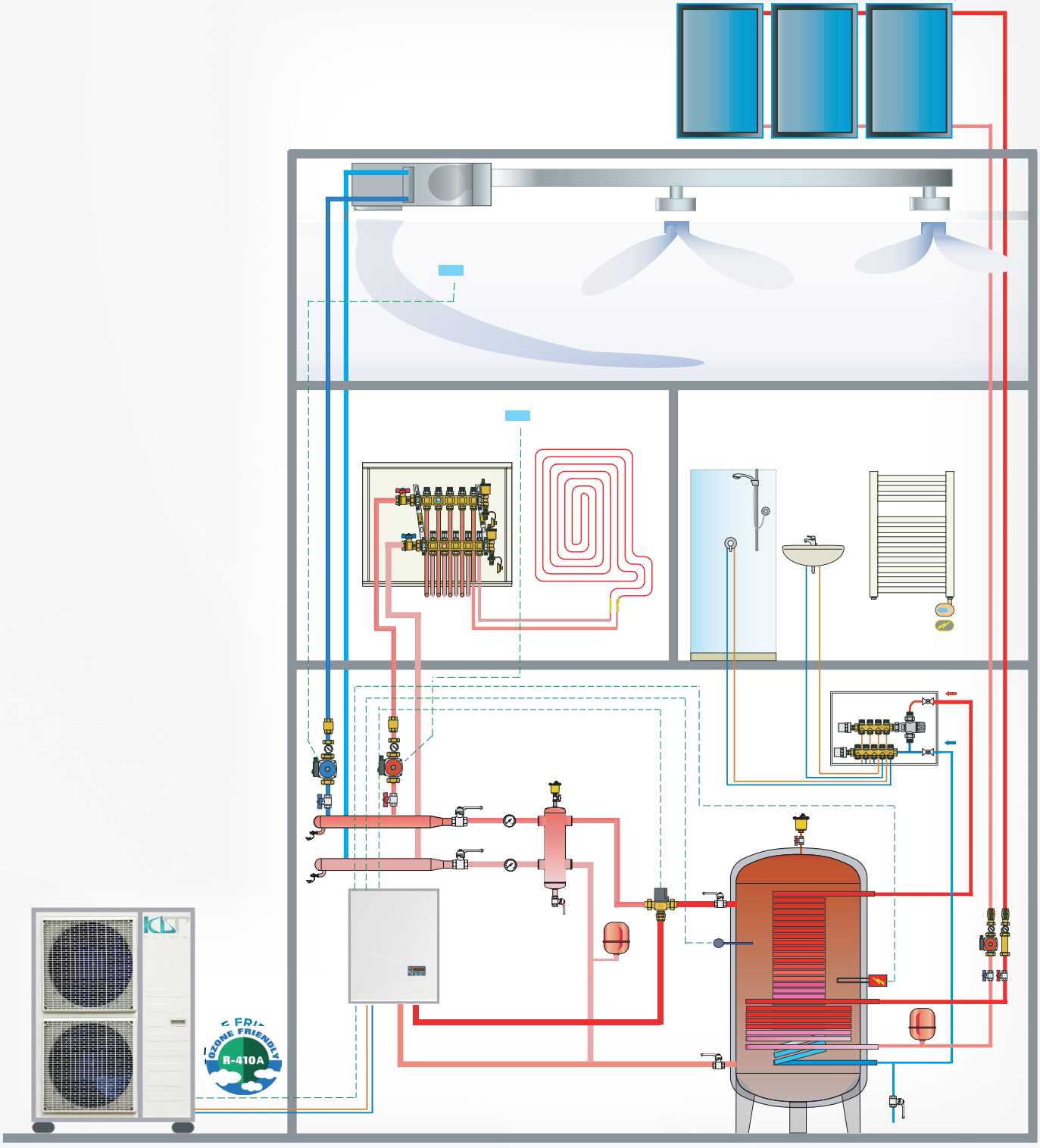

TORMEX FLR

SPLIT TYPE AIR TO WATER HEAT PUMPS – FLOOR MOUNTED VERSION

Hc kW 5,7 ÷ 14,1

Cc kW 4,1 ÷ 10,5

- **A++ high-efficiency floor-mounted inverter unit**
- **R410a full inverter**
- **Compact dimensions**
- **Built-in, comprehensive DHW module**
- **Full solar thermal module management**
- **Integral boiler function control**

MADE IN ITALY



Indoor unit FLR



DCINVERTER

TORMEX 06-09
Outdoor unit



TORMEX 12-15
Outdoor unit



PRODUCT FEATURES

The Tormex water chillers and heat pumps series are designed for applications in residential and commercial areas, these units are extremely versatile and can operate in heat pump mode with the ability of producing hot water at a temperature of 58°C for environmental heating and sanitary applications. The INVERTER compressor with brushless DC motor technology, matched with electronic expansion valve, pump, and variable speed blower are generally used for optimizing the power consumption and efficient operation of the refrigerating components. All Tormex units are made up of hotgalvanised thick sheet metal, painted with polyurethane. The used DC inverter compressors are a rotary hermetic type (for 06 and 09 models) and twin rotary (for the 12 and 15 models), designed to be used with R410 refrigerant.

The fans are axial type with plastic aerofoil blades and the electric motors are all brushless DC type with 8 poles (about 200/1000 rpm). The Tormex chillers units are supplied with an integrated hydraulic circuit including the circulating pump, suitable for chilled water utilization and directly managed by the controller on board of internel unit. The circulation pump is always modulating type, it adopts motor DC brushless for Tormex models.

BOILER MODELS	TORMEX	06	09	12	15
D.h.w. tank volume suggested (liters)	BRENTA	200	200	200/300	300
	TENNA	N / A	N / A	600	600

ACCESSORIES	
Expansion vessle for models ACS and Solar ACS	Kit electrical resistance (after 137KRI... instead of the dots insert the reference code according to the below table)
Kit for boiler integration	

TORMEX	PERFORMANCE DATA		06	09	12	15
	Energetic class		A++	A++	A++	A++
Cooling	Cooling capacity (1)	kW	2,4-4,71	4,3-8,12	4,5-9,03	6,9-10,82
	Power input (1)	kW	1,52	1,96	2,90	3,49
	E.E.R. (1)	W/W	3,10	3,11	3,11	3,1
	Cooling capacity (2)	kW	3,5-6,12	4,3-8,12	6,02-11,9	9,0-14,07
	Power input (2)	kW	1,61	2,13	3,12	3,7
	E.E.R. (2)	W/W	3,8	3,81	3,82	3,8
Heating	Heating capacity (3)	kW	3,2-5,44	3,9-7,44	6,0-11,98	7,5-14,10
	Power input (3)	kW	1,70	2,32	3,72	4,35
	C.O.P. (3)	W/W	3,2	3,21	3,22	3,24
	Heating capacity (4)	kW	3,8-5,9	4,05-8,01	6,9-12,58	8,5-14,95
	Power input (4)	kW	1,44	1,95	3,05	3,64
	C.O.P. (4)	W/W	4,1	4,11	4,12	4,10

Performance refers to the following conditions:
(1) Cooling: outside air temperature 35°C; inlet/outlet water temperature 12/7°C.
(2) Cooling: outside air temperature 35°C; inlet/outlet water temperature 23/18°C.
(3) Heating: outside air temperature 7°C b.s. 6°C dry bulb; inlet/outlet water temperature 40/45°C.
(4) Heating: outside air temperature 7°C b.s. 6°C dry bulb; inlet/outlet water temperature 30/35°C.
The electrical data of the external and internal unit are indicated in order to calculate the size of the circuit breakers and the electrical connections.
It is necessary to add the power input of the internal and external units and any eventual electrical resistors.

WARNING: the minimum temperatures allowed for the stocking of the unit is +5°C

TORMEX FLR

TECHNICAL DATA

TORMEX	OUTDOOR UNITS		06	09	12	15
	Energetic class		A++	A++	A++	A++
Electrical data	Power supply	V/Ph/Hz	230V/1/50	230V/1/50	230V/1/50	400V/3P+N+T/50
	Max power input	kW	2,69	4,49	5,62	7,77
	Maximum current at start	A	7,6	12,7	15,9	7,4
	Max current input	A	11,8	19,7	24,7	11,2
Compressor	TYPE		Rotary DC inverter	Rotary DC inverter	Twin Rotary DC inverter	Twin Rotary DC inverter
	Number		1	1	1	1
	Cooling power input (1)	kW	1,25	2,16	2,73	3,42
	Cooling power input (2)	kW	1,21	2,10	2,59	3,32
	Heating power input (3)	kW	1,36	2,26	2,90	3,59
	Heating power input (4)	kW	1,18	2,00	2,44	3,14
Engine fan	TYPE		DC brushless Motor	DC brushless Motor	DC brushless Motor	DC brushless Motor
	Number		1	1	2	2
	Nominal power input	kW	0,156	0,188	0,180 (x2)	0,180 (x2)
	Nominal current input	A	0,48	0,57	0,55 (x2)	0,55 (x2)
	Speed	r/min	900	900	1000	1000
	Max air flow	m³/s	1,08	1,63	2,11	2,59
Refrigerant	TYPE		R410A	R410A	R410A	R410A
	Refrigerant quantity (5)	Kg	1,35	1,90	3,50	3,40
	Design pressure (high / low)	MPa	4,2/1,5	4,2/1,5	4,2/1,5	4,2/1,5
Refrigerant pipes	Liquid / gas	mm	6,35/12,7	9,53/15,9	9,53/15,9	9,53/15,9
	Max.refrigerant pipe length	m	25	30	30	30
	Max height distance	m	15	15	20	20
Noise	Sound pressure (6)	dB(A)	44÷50	45÷53	46÷54	46÷54
Sizes and weight	Sizes (WxHxD)	mm	916x719x379	975x861x374	1024x1402x454	1024x1402x454
	Packaging max size (WxHxD)	mm	1090x828x490	1090x978x490	1095x1525x490	1095x1525x490
	Net / Gross weight	Kg	50/61	66/77	109/122	114/127

Performance refers to the following conditions:
(1) Cooling: outside air temperature 35°C; inlet/outlet water temperature 12/7°C.
(2) Cooling: outside air temperature 35°C; inlet/outlet water temperature 23/18°C.
(3) Heating: outside air temperature 7°C b.s. 6°C dry bulb; inlet/outlet water temperature 40/45°C.
(4) Heating: outside air temperature 7°C b.s. 6°C dry bulb; inlet/outlet water temperature 30/35°C.
(5) The refrigerant charge is valid upto 5 meters distance between the indoor and the outdoor unit.
For distances higher than 5 meters ad 20g/m of refrigerant for models 06 and 50g/m of refrigerant for modekls 09 - 12 - 15.
(6) Sound pressure level measured in free field conditions at 1m from the unit, according to ISO 3744.
NB The performance data is given as indicative and may change at any time.

WARNING: the minimum temperatures allowed for the stocking of the unit is +5°C

TECHNICAL DATA

ACCESORIES



Expansion vessle for models ACS and Solar ACS

for models:	06	09	12	15

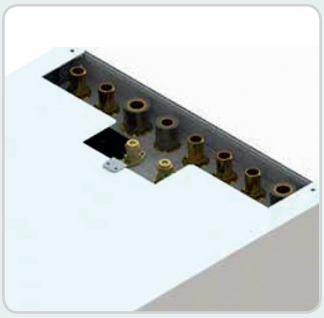

Additional sleeves for integrating DHW boilers and management

for models:	06	09	12	15



Anti-vibration mount feet (AVF)

for models:	06	09	12	15



Kit electrical resistance on user side only on DUO or SOLAR DUO versions

M for models: 2kW	06	09	12	
T for models: 4kW				15

VERSIONS

ACS

Tormex Acs: floor standing unit with a technical domestic hot water buffer of 250 litre, user side + DHW heat exchangers and for the rapid production of DHW, user side and DHW pumps, water filter, 8 liter expansion vessel, flowswitch, flow meter for DHW management, management of electrical resistance for DHW side, outdoor air sensor for dynamic setpoint control.

DUO

Tormex Duo: floor standing unit with a technical domestic hot water buffer of 190 litre + 40 litre user side buffer + DHW heat exchangers and for the rapid production of DHW, user side and DHW pumps, water filter, 2 fitted 8 liter expansion vessels, flowswitch, flow meter for DHW management, management of electrical resistance for user and DHW side, outdoor air sensor for dynamic setpoint control.

SOLAR ACS

Tormex Solar Acs: floor standing unit with a technical domestic hot water buffer of 250 litre, user side + DHW heat exchangers and for the rapid production of DHW, user side and DHW pumps, water filter, 8 liter expansion vessel, flowswitch, flow meter for DHW management, management of electrical resistance for DHW side, outdoor air sensor for dynamic setpoint
control. Furthermore it has a the solar coil inside the buffer tank, the manangement of the solar panel and pump.

SOLAR DUO

Tormex Solar Duo: floor standing unit with a technical domestic hot water buffer of 190 litre + 40 litre user side buffer + DHW heat exchangers and for the rapid production of DHW, user side and DHW pumps, water filter, 2 fitted 8 liter expansion vessels, flowswitch, flow meter for DHW management, management of electrical resistance for user and DHW side, outdoor air sensor for dynamic setpoint control.
Furthermore it has a the solar coil inside the buffer tank, the manangement of the solar panel and pump.

TORMEX FLR

TECHNICAL DRAWINGS

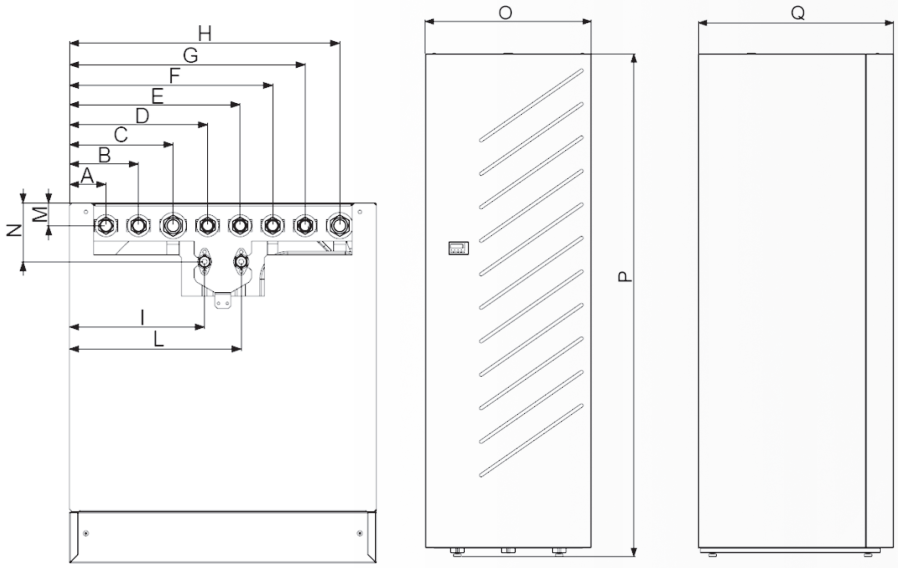

Models \ Sizes (mm)	A	B	C	D	E	F	G	H	I	L	M	N	O	P	Q
06-09-12-15	71	134	201	268	331	394	457	524	262	333	44	114	595	1789	700

ACS / SOLAR ACS MODELS INDOOR UNITS AND ADDITIONAL KIT

ACS MODEL

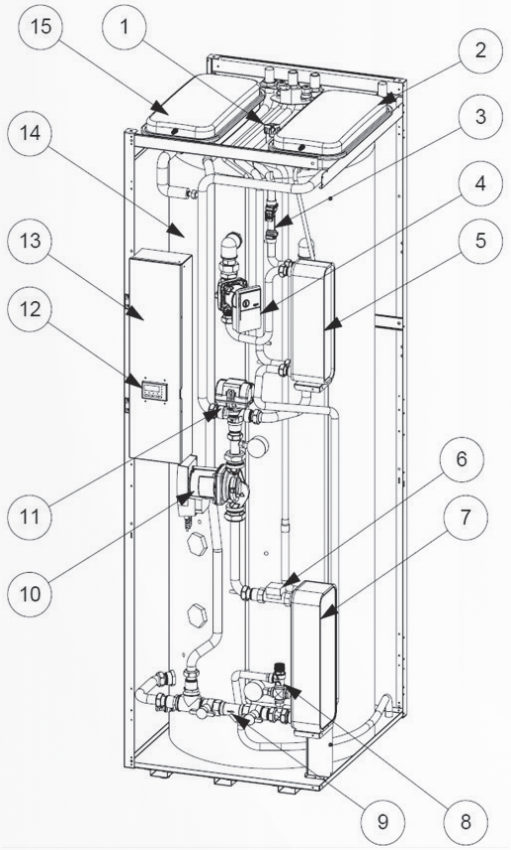

LEGEND

1. Automatic air purge valve for the heating section
2. Expansion vessel for the heating section
3. Flow meter for the quick hot water section
4. Circulation pump for the quick hot water section
5. Brazed plate exchanger for the quick hot water section
6. Safety flow switch
7. Brazed plate exchanger
8. 3 bar safety valve
9. Water filter
10. Circulation pump
11. User plant switch valve/for the heating section
12. User interface
13. Electrical control panel
14. Buffer tank (250 L)
15. Plant side expansion vessel (kit VS8 optional)

SOLAR ACS MODEL

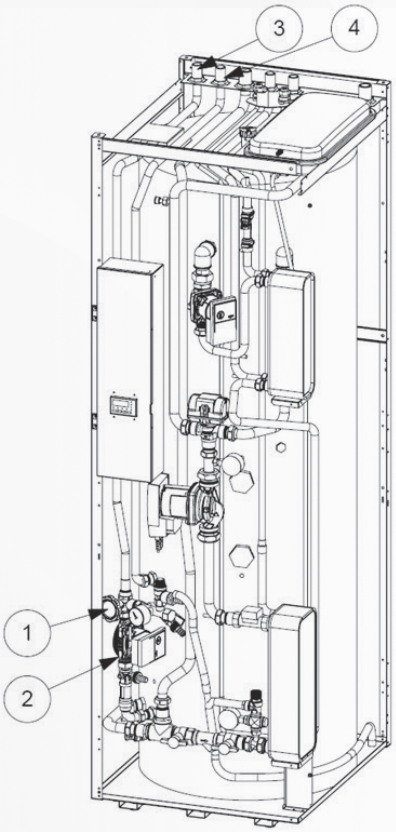

LEGEND

1. Solar group
2. Solar side circulation pump
3. Solar plant outlet pipe ("to solar plant" label)
4. Solar plant return pipe ("from solar plant" label)

DUO / SOLAR DUO MODELS INDOOR UNITS AND ADDITIONAL KIT

DUO MODEL

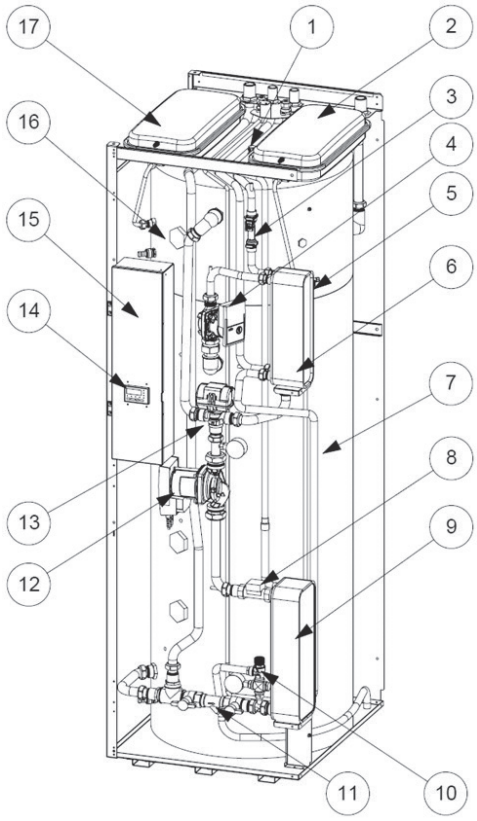

LEGEND

1. Automatic air purge valve for the heating section
2. Expansion vessel for the heating section
3. Flow meter for the quick hot water section
4. Circulation pump for the quick hot water section
5. Plant side automatic air purge valve
6. Brazed plate exchanger for the quick hot water section
7. Buffer tank (190 L)
8. Safety flow switch
9. Brazed plate exchanger
10. 3 bar safety valve
11. Water filter
12. Circulation pump
13. User plant switch valve/for the heating section
14. User interface
15. Electrical control panel
16. Plant side buffer tank(40 L)
17. Plant side expansion vessel

SOLAR DUO MODEL

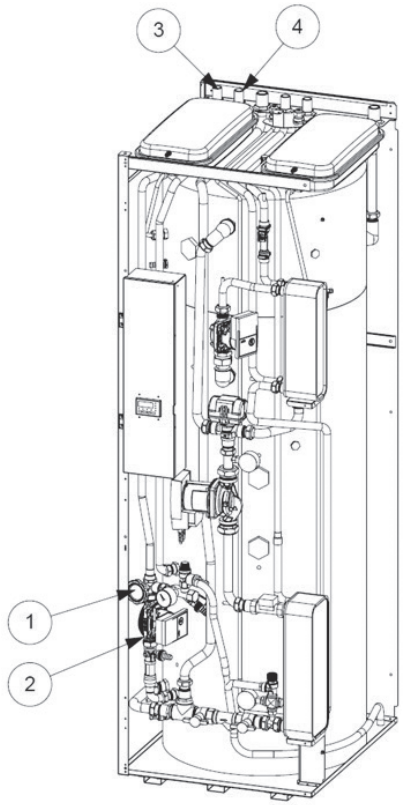

LEGEND

1. Solar group
2. Solar side circulation pump
3. Solar plant outlet pipe (“to solar plant” label)
4. Solar plant return pipe (“from solar plant” label)

NOTES

ALITEX

SPLIT TYPE AIR TO WATER HEAT PUMPS – FLOOR MOUNTED VERSION

Hc kW 27 (A7/W35*)

Cc kW 23 (A35/W7)



- **Works up to a temperature of -20°C**
- **Ideal for DHW: +60°C**
- **COP 4.1***
- **Low noise level**
- **EVI technology**
- **Standard EC fan**
- **Up to 4 more units can be connected in a cascade fashion**
- **Innovative sliding defrost function**
- **Coil with a hydrophilic coating**

MADE IN ITALY

PRODUCT FEATURES

The new ALITEX unit has been designed for use in both the residential and service sectors; it can be installed in either new buildings or those being renovated. It uses EVI (Enhanced Vapour Injection) technology which significantly extends the operating limits of the appliance. The unit's "Heating" function has been designed to work in bitterly cold external air temperatures (up to -20 °C) whilst heating the water to a high temperature (max. 60 °C).
Its high working range makes ALITEX the perfect solution for both low-temperature systems (e.g. radiant panels) and high-temperature ones (e.g. radiators) in new buildings or those being redeveloped.
The available KITS can be used to produce domestic hot water during winter and summer so that no additional heat sources need to be installed.
The ALITEX units have been developed with a "modular logic" in order to meet a wide range of heating and cooling performances. Multiple basic modules (4 max.) can be connected to the unit in order to expand its potential applications.
The modules have been designed so that they can be easily installed and interconnected via the kit that is supplied. The modular logic makes increasing the system's power after the initial installation much easier.
The electronic control system intelligently coordinates the various units to ensure continuous operation and maintain high efficiency.

ACCESORIES

The standard basic module includes a hydronic kit, comprising a high-efficiency electronic circulation pump, expansion tank, safety valve and a no-flow protection device. These have already been assembled and are ready to be connected to the pre-installed system.

The following accessories allow the most suitable operating mode to be chosen, depending on the various system requirements:

Factory fitted accessories			
Kit 3 ways valve DHW inside ALITEX	**230K3W030**	Heaters kit for basin defrost ALITEX	**230HKD120**
Coils with prevarnished fins ALITEX	**230CPF120**	Electrical panel ventilation / Heating kit ALITEX	**230HKA150**
Heat exchanger with Electrofin® treatment ALITEX	**230HWE101**	Multistep control kit	**230MCK200**
Refrigerants gauges	**230RFG100**	Interface module RS 485 Modbus ALITEX	**230IMM100**
Antifreeze evaporator heater + pipes ALITEX	**230AEH100**	Compressors soft starter ALITEX	**230ACS220**
Antifreeze evaporator heater + pipes with DHW ALITEX	**230AEH200**	ALITEX remote control	**230ARV100**

Accessories supplied loose			
Joint kit ALITEX units	**231JKA010**	Anti-vibration mount feet (4 pcs)	**231AVF400**
Hydraulic joint kit ALITEX units	**231HJK010**	Water filter kit 2"	**231WFK200**
Hydraulic joint kit ALITEX units + heaters	**231JKU020**	Water filter kit 2" ½	**231WFK250**
Basement clamp kit 2 units ALITEX	**231BCK220**	Kit 3 ways remote valve DHW 1"¼	**231K3W114**
Basement clamp kit 3 units ALITEX	**231BCK030**	Kit 3 ways remote valve DHW 2"	**231K3W200**
Basement clamp kit 4 units ALITEX	**231BCK240**		

ALITEX



TECHNICAL DATA

			Ketty
A7/W35	Heating capacity	kW	26,93
	Total power input ****	kW	6,83
	COP (EN 14511-2013) *		4,12
A7/W45	Heating capacity	kW	27,2
	Total power input ****	kW	8,43
	COP (EN 14511-2013) *		3,34
A2/W35	Potenzialità termica	kW	24,14
	Total power input ****	kW	6,79
	COP (EN 14511-2013) *		3,72
A2/W45	Heating capacity	kW	24,63
	Total power input ****	kW	8,41
	COP (EN 14511-2013) *		3,04
A35/W7	Cooling capacity	kW	23,02
	Total power input ****	kW	7,87
	EER (EN 14511-2013) *		3,03
A35/W18	Cooling capacity	kW	30,73
	Total power input ****	kW	8,22
	EER (EN 14511-2013) *		3,85
SCOP			3,29
ESEER (**)			3,54
Energetic class Reg. Del.(UE) 811/2013			A+
Max current		A	19,5
Max current at start		A	104,33
Scroll Compressors		n°	1
Refrigerant Circuits		n°	1
Capacity steps		n°	1
Supply voltage		V/Ph/Hz	400/3/50
Sound power Lw (***)		dB(A)	69,8
Sound pressure Lp (***)		dB(A)	38,1
USER PLANT HEAT EXCHANGER			
Type of fluid			water
Brazed plate exchanger		n°	1
Water flow		l/s	1,1
Pressure drops		kPa	9,21
FAN SECTION			
Axial fan		n°	0,75
Total air flow		m^3/s	4,44
Rotation speed		g/min^{-1}	687
Unit power input		kW	0,61
Unit current input		A	1
SIZES AND WEIGHT (without accessories)			
Lenght		mm	1185
Width		mm	1300
Height		mm	2306
Empty weight		kg	520
HYDRAULIC PART			
User plant pump		n°	1
Available externe pressure		kPa	83,4
Available ext. press. (K3V factory fitted)		kPa	79,8
Power input		kW	0,35
Current input		A	1,33
Plant side expansion vessel		l	10

(*) Ratio of the heating/cooling capacity to the total effective power input according to EN 14511 Regulation
(**) Leaving water tempersature: 7°C.
(***) Noise pressure according to ISO 3744. Sound pressure at 10 meters in free field.
(****) Power input with pump inlcuded

Sliding defrost function

The main function of the sliding defrost is to only defrost the coils when necessary, i.e. when ice forming on the coil's surface has caused it to no longer have an acceptable heat exchange coefficient.
The sliding defrost function makes use of the outdoor air temperature and evaporation pressure control.
The advantage of the sliding defrost function is that the heat pump will only defrost when this function is necessary and will continue to work uninterrupted or for long periods of time in particularly harsh weather conditions. This differs from the traditional timed defrost function or evaporation pressure control. For obvious reasons, these perform cyclical defrosts that are timed or take place at regular intervals (pressure control), even if they are not necessary.

Modularity

The ALITEX unit has been designed as a module so that it can be easily connected to other units.
The singular modules can be moved independently and, once they have been connected, they function as a single unit.
The modular logic enables other modules to be connected to the unit, even after the initial installation; these allow the system's power to be increased without having to make any big adjustments.
A maximum of 4 units can be connected to the ALITEX unit. Its well-thought-out design minimises the space required and therefore, the overall dimensions of the unit. The coupling kits make the positioning and connection much easier.

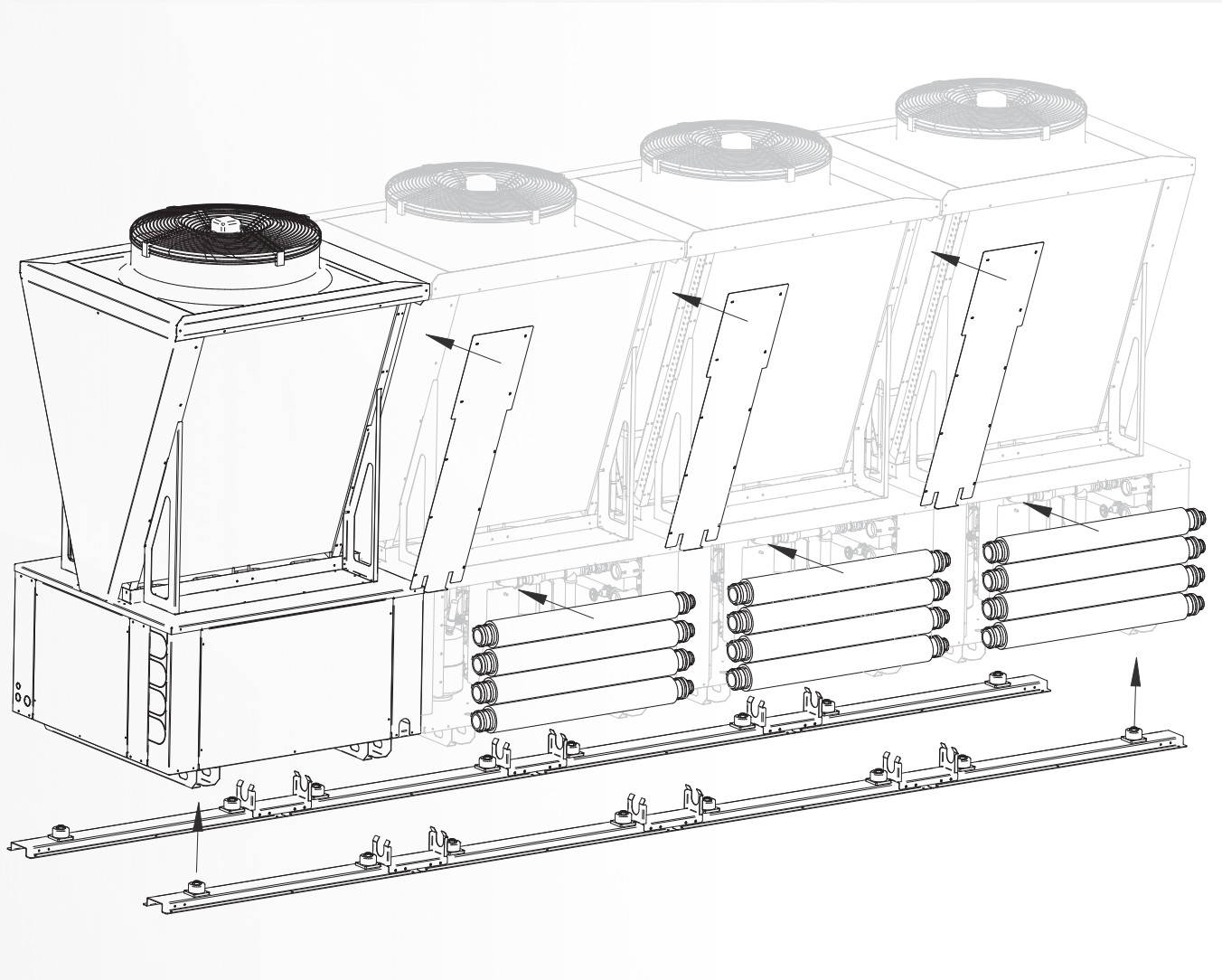

OVERALL DIMENSIONS

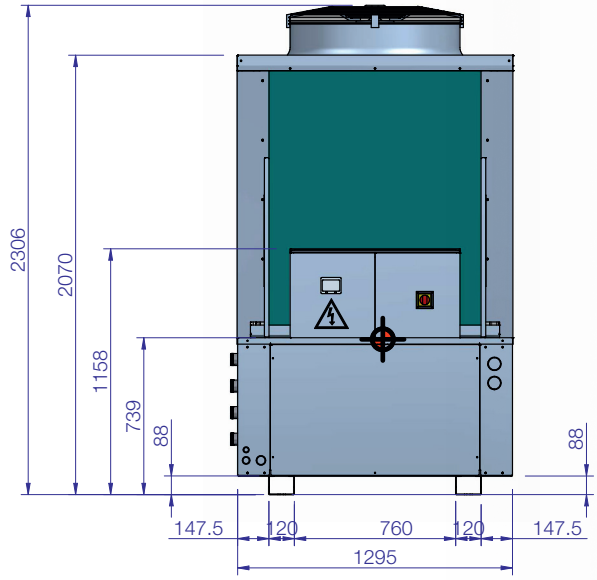

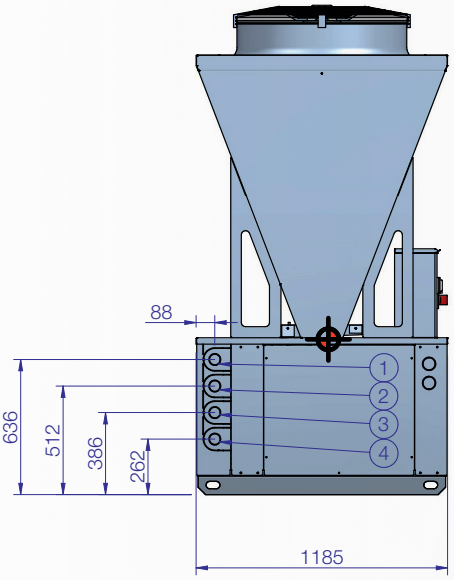

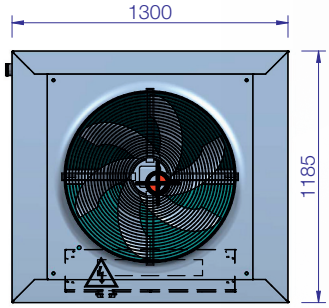

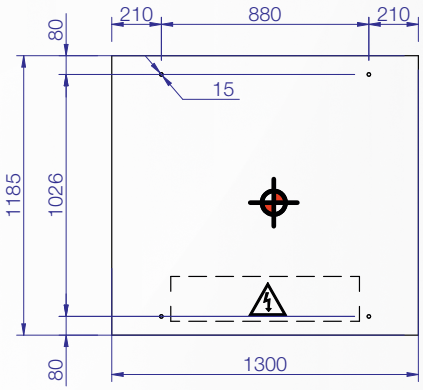

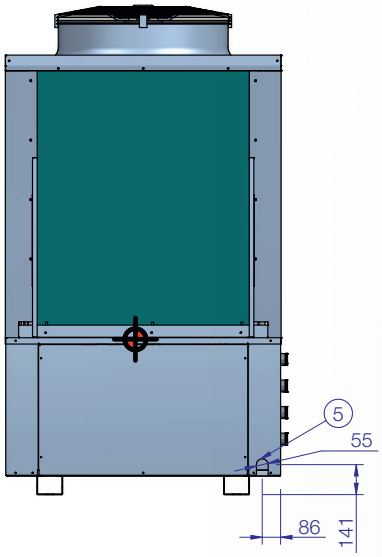

NOTES

ALISEA

HIGH EFFICIENCY AIR COOLED WATER CHILLERS

Cc kW 39,5 ÷ 173,5



- **R410a Multiscroll unit**
- **High efficiency at partial loads**
- **Optional internal hydronic kit**
- **Low noise level**
- **Available in a STD or SUPER SILENT (SLN) version**
- **Standard RS485 card**
- **Wide range of accessories (optional)**
- **Robust and well-finished metalwork**

MADE IN ITALY

PRODUCT FEATURES

High efficiency air cooled water chillers, for outdoor installations with scroll compressors.

Available in a wide range of models with multi-compressor and cooling capacity 40 up to 180 kW. All units are equipped with scroll compressors, with refrigerant R410A and are designed for optimal energy efficiency, particularly high operating at partial loads. The compactness and the presence of a wide range of equipments and accessories, allow the use of the ALISEA units in any plant environment. Thanks to the construction solutions adopted, installation and maintenance activities are particularly facilitated allowing saving time and money to the installation personnel.

Available on request: customised dimensions, refrigerants, operating conditions and increased efficiency.

ACCESORIES	
1 pump	Compressor crankcase heater
1 HP pump	Compressor magnetothermal protection
2 pumps	Anti-vibration mount feet
2 HP pumps	Condensing coils protection grids
1 pump + buffer tank in series	Compressors soft starter
1 HP pump + buffer tank in series	Coils with prevarnished fins
2 pumps + buffer tank in series	Coils with fins in copper
2 HP pumps + buffer tank in series	Power factor regulator kit (cos φ 0,95)
Partial heat recovery (desuperheater)	Electrical panel ventilation / Heating kit
Total heat recovery	Modulating fan speed control
Refrigerants gauges	Electronic thermostatic expansion valve
Top remote control	El. Exp. Valve backup battery
Antifreeze evaporator heater + pipes	EC Fans
Antifreeze evaporator heater + buffer tank	Free-cooling version available (see page 46)

ALISEA

TECHNICAL DATA ALISEA STD

Alisea Std unit			082 A	102 A	122 A	152 A	123 A	133 A	153 A	134 A	154 A	126 A
A35/W7	Cooling capacity	kW	39,5	49,7	58,4	75,9	84,5	93,8	112,6	125,8	151,8	173,5
	Total power input	kW	15,9	19,4	22,7	29,1	34,1	36,7	42,2	47,7	57,9	67,5
	EER (EN 14511-2013) (*)		2,5	2,6	2,6	2,6	2,5	2,6	2,7	2,6	2,6	2,6
A35/W18	Cooling capacity	kW	54,1	68,1	80,2	103,9	115,9	131,6	154,2	176,4	207,9	238,0
	Total power input	kW	16,6	20,4	23,9	30,9	35,8	38,8	44,9	50,4	61,6	71,0
	EER (EN 14511-2013) (*)		3,2	3,3	3,3	3,4	3,2	3,4	3,4	3,5	3,4	3,3
ESEER (**)			3,41	3,66	3,74	3,85	3,71	3,79	3,87	3,60	3,67	3,70
Max current		A	36,0	40,6	48,8	65,8	75,3	84,0	94,5	109,2	127,4	146,4
Current at start		A	112,8	131,1	142,2	172,5	166,4	166,4	201,2	188,7	231,8	235,2
Scroll Compressors		n°	2	2	2	2	3	3	3	4	4	6
Refrigerant Circuits		n°	1	1	1	1	1	1	1	2	2	2
Capacity steps		n°	2	2	2	2	3	3	3	4	4	6
Supply voltage		V/Ph/Hz	400/3/50									
Sound power Lw (***)		dB(A)	79,5	79,5	79,5	83	82,2	82,2	83,7	82,5	85,2	84,3
Sound pressure Lp (***)		dB(A)	47,8	47,8	47,8	51,1	50,3	50,3	51,8	50,7	53,2	52,3
USER PLANT HEAT EXCHANGER												
Brazed plate exchanger		n°	1	1	1	1	1	1	1	1	1	1
Water flow (A35/W7)		l/s	1,89	2,37	2,79	3,63	4,04	4,46	5,38	6,18	7,25	8,29
Pressure drops (A35/W7)		kPa	21,6	26,8	25,7	25,4	18,7	22,8	22,9	31,3	35,8	34,4
FAN SECTION												
Fans		n°	1	1	1	2	2	2	2	2	3	3
Air flow		m^3/h	21800	21200	21200	44400	44400	44400	43400	42400	66000	62580
Rotation speed		min^{-1}	880	880	880	880	880	880	880	880	880	880
Unit power input		kW	1,9	1,9	1,9	1,9	1,9	1,9	1,9	1,9	1,9	1,9
Unit current input		A	4,2	4,2	4,2	4,2	4,2	4,2	4,2	4,2	4,2	4,2
SIZES AND WEIGHT												
Lenght		mm	1955	1955	1955	3005	3005	3005	3005	3005	4255	4255
Width		mm	1123	1123	1123	1123	1123	1123	1123	1123	1123	1123
Height		mm	1954	1954	1954	1954	1954	1954	1954	1954	1954	1954
Weight		kg	528	553	559	701	778	780	832	941	1065	1270
WATER SECTION (OPTIONAL)												
Storage water tank		l	150	150	150	300	300	300	300	300	300	300
Expansion vessel		l	5,0	5,0	5,0	8,0	8,0	8,0	8,0	8,0	18,0	18,0
Max. water pressure		kPa	600,0	600,0	600,0	600,0	600,0	600,0	600,0	600,0	600,0	600,0
Nitrogen precharge pressure		kPa	150,0	150,0	150,0	150,0	150,0	150,0	150,0	150,0	150,0	150,0
Weight P1 hydronic kit		kg	49	49	49	66	66	66	70	70	82	82
Weight P2 hydronic kit		kg	77	77	77	100	100	100	108	108	120	120
Weight P1S hydronic kit (****)		kg	85	85	85	116	116	116	120	120	131	131
Weight P2S hydronic kit (****)		kg	104	104	104	141	141	141	148	148	160	160
USER PLANT STD PUMP		n°	1	1	1	1	1	1	1	1	1	1
Available externe pressure		kPa	139	130	125	117	117	105	84	111	80	96
Power input		kW	1,1	1,1	1,1	1,47	1,47	1,47	1,47	2,0	2,0	2,5
Current input		A	2,1	2,1	2,1	2,72	2,72	2,7	2,7	3,65	3,65	5,0
USER PLANT HP PUMP		n°	1	1	1	1	1	1	1	1	1	1
Available externe pressure		kPa	172	160	154	156	157	146	127	152	123	154
Power input		kW	1,4	1,4	1,4	2,0	2,0	2,0	2,0	2,5	2,5	3,5
Current input		A	2,7	2,7	2,7	3,65	3,65	3,65	3,65	5,0	5,0	6,3

(*) Ratio of the heating/cooling capacity to the total power input (no pump) according to EN 14511:2013 Regulation
(**) Leaving water tempersature: 7°C.
(***) Noise pressure according to ISO 3744. Sound pressure at 10 meters in free field
(****) Empty weight

TECHNICAL DATA ALISEA SLN

Alisea Supersilenced unit			082 A	102 A	122 A	152 A	123 A	133 A	153 A	134 A	154 A	126 A
A35/W7	Cooling capacity	kW	38,7	47,8	59,0	73,0	85,4	93,3	109,6	127,1	146,6	160,8
	Total power input	kW	15,5	19,6	23,3	28,9	32,6	35,5	42,1	47,2	57,8	68,3
	EER (EN 14511-2013) (*)		2,5	2,4	2,5	2,5	2,6	2,6	2,6	2,7	2,5	2,3
A35/W18	Cooling capacity	kW	53,0	65,4	81,0	100,0	117,1	130,9	150,1	178,4	200,7	220,7
	Total power input	kW	16,3	20,6	24,5	30,8	34,3	37,5	44,9	49,8	61,7	71,9
	EER (EN 14511-2013) (*)		3,3	3,2	3,3	3,2	3,4	3,5	3,3	3,6	3,2	3,1
ESEER (**)			3,56	3,63	3,56	3,85	3,85	3,80	3,88	3,67	3,60	3,44
Sound power Lw (***)		dB(A)	76,4	76,4	78,8	80	79,1	79,1	80,8	80,8	82,3	81,2
Sound pressure Lp (***)		dB(A)	44,7	44,7	46,9	48,2	47,2	47,2	48,9	48,7	50,3	49,1
FAN SECTION												
Fans		n°	1	1	2	2	2	2	2	3	3	3
Air flow		m^3/h	17800	16800	35000	35000	33600	33600	33400	49600	47600	47600
Rotation speed		min^{-1}	690	690	690	690	690	690	690	690	690	690
Unit power input		kW	1,3	1,3	1,3	1,3	1,3	1,3	1,3	1,3	1,3	1,3
Unit current input		A	2,0	2,0	2,0	2,0	2,0	2,0	2,0	2,0	2,0	2,0
SIZES AND WEIGHT												
Lenght		mm	1955	1955	3005	3005	3005	3005	3005	4255	4255	4255
Width		mm	1123	1123	1123	1123	1123	1123	1123	1123	1123	1123
Height		mm	1954	1954	1954	1954	1954	1954	1954	1954	1954	1954
Weight		kg	545	570	687	719	795	797	850	1066	1089	1293
Weight P1 hydronic kit		kg	49	49	60	66	66	66	70	76	82	82
Weight P2 hydronic kit		kg	77	77	90	100	100	100	108	114	120	120
Weight P1S hydronic kit (****)		kg	85	85	101	116	116	116	120	125	131	131
Weight P2S hydronic kit (****)		kg	104	104	123	141	141	141	148	154	160	160

(*) Ratio of the heating/cooling capacity to the total power input (no pump) according to EN 14511:2013 Regulation
(**) Leaving water tempersature: 7°C.
(***) Noise pressure according to ISO 3744. Sound pressure at 10 meters in free field
(****) Empty weight

ALISEA PLUS

HIGH EFFICIENCY AIR COOLED WATER CHILLERS

Cc kW 193 ÷ 330



- **R410a Multiscroll unit**
- **High efficiency at partial loads**
- **Optional internal hydronic kit**
- **Low noise level**
- **Available in a STD or SUPER SILENT (SLN) version**
- **Standard RS485 card**
- **Wide range of accessories (optional)**
- **Robust and well-finished metalwork**

MADE IN ITALY

PRODUCT FEATURES

High efficiency air cooled water chillers, for outdoor installations with scroll compressors.

Available in a wide range of models with multi-compressor and cooling capacity 190 up to 330 kW.
All units are equipped with scroll compressors, with refrigerant R410A and are designed for optimal energy efficiency, particularly high operating at partial loads. The compactness and the presence of a wide range of equipments and accessories, allow the use of the ALISEA units in any plant environment.
QUIET OPERATION
All standard models have the compressors assembled into a soundproofed compartment. The noise emission is very low and it is in compliance with the required normal standard. For particularly low noise requirements, a Low Noise version (SLN) is available. In addition to strengthening insulation of the compressor compartment, low speed fans and increased heat exchange surfaces are used in order to ensure high energy efficiency.

Available on request: customised dimensions, refrigerants, operating conditions and increased efficiency.

ACCESORIES

ACCESORIES	
1 pump hydronic kit	Rubber antivibration mountings std/ hydronic kit (1)
1 HP pump hydronic kit	Rubber antivibration mountings hydronic kit (2)
2 pumps hydronic kit	Condensing coils protection grids
2 HP pumps hydronic kit	Compressors soft starter
1 pump hydronic kit + buffer tank	Coils with prevarnished fins
1 HP pump hydronic kit + buffer tank	Condensers fully ECOFIN painted
2 pumps hydronic kit + buffer tank	Condensers with copper fins
2 HP pumps hydronic kit + buffer tank	Power factor regulator kit (cos φ 0,95)
Partial heat recovery (desuperheater) HRP	Electrical panel ventilation / Heating kit
Total heat recovery HRT	Modulating fan speed control
Refrigerants gauges	Electronic thermostatic expansion valve
Top remote control	El. Exp. Valve backup battery
Antifreeze evaporator heater + pipes	EC Fans
Antifreeze evaporator heater + buffer tank	A.V mounts (spring type) only pipes
Compressor crankcase heater	A.V mounts (spring type) pumps+buffer tank
Compressor magnetothermal protection	

ALISEA PLUS

TECHNICAL DATA ALISEA PLUS STD

ALISEA Plus Std unit			136A	146A	156A	234A	284A	304A
A35/W7	Cooling capacity	kW	193,38	212,10	232,20	266,79	297,49	329,63
	Total power input	kW	73,08	73,79	82,30	96,90	103,20	117,88
	EER (EN 14511-2013) (*)		2,61	2,83	2,78	2,73	2,84	2,76
A35/W18	Cooling capacity	kW	264,45	288,66	310,04	357,43	407,51	446,09
	Total power input	kW	79,71	80,20	90,23	105,03	111,70	128,43
	EER (EN 14511-2013) (*)		3,23	3,50	3,35	3,36	3,55	3,39
ESEER (**)			3,74	3,95	4,20	4,04	3,98	3,96
Max current		A	181,60	189,80	206,20	234,80	260,20	286,20
Current at start		A	283,8	316,9	333,3	455,8	481,2	507,2
Scroll Compressors		n°	6	6	6	4	4	4
Refrigerant Circuits		n°	2	2	2	2	2	2
Capacity steps		n°	6	6	6	4	4	4
Supply voltage		V/Ph/Hz	400/3/50					
Noise power level Lw (***)		dB(A)	85,2	85,8	86,7	88,9	89,6	90,2
Sound pressure Lp (***)		dB(A)	53,0	53,5	54,5	56,6	57,3	57,8
USER PLANT HEAT EXCHANGER								
Fluid type		-	clean water					
Brazed plate exchanger		n°	1	1	1	1	1	1
Fluid flow (A35/W7)		l/s	9,24	10,13	11,09	12,75	14,21	15,75
Pressure drops (A35/W7)		kPa	39,12	41,69	40,01	48,29	41,93	41,68
FAN SECTION								
Axial fans		n°	4	4	4	4	6	6
Total air flow		m^3/s	24,35	23,20	23,20	24,72	34,21	34,21
Rotation speed		min^{-1}	885	885	885	885	885	885
Unit power input		kW	1,70	1,70	1,70	1,70	1,70	1,70
Unit current input		A	3,70	3,70	3,70	3,70	3,70	3,70
SIZES AND WEIGHT								
Lenght		mm	4125	4125	4125	5125	5125	5125
Width		mm	2205	2205	2205	2205	2205	2205
Height		mm	2266	2266	2266	2266	2266	2266
Empty weight		kg	1717	1802	1825	2248	2333	2361

(*) Ratio between power output and consumption (without pump) according to EN 14511 : 2013 .
(**) Leaving water temperature 7°C constant.
(***) Noise power according ISO 3744. Sound pressure at 10 meters in free field

TECHNICAL DATA ALISEA PLUS SLN

ALISEA Plus Supersilenced unit			136A	146A	156A	234A	284A	304A
A35/W7	Cooling capacity	kW	196,36	209,20	229,35	271,87	290,18	325,97
	Total power input	kW	69,70	72,91	81,30	94,45	104,08	116,77
	EER (EN 14511-2013) (*)		2,78	2,83	2,78	2,85	2,75	2,75
A35/W18	Cooling capacity	kW	268,49	283,56	305,11	366,17	394,57	439,18
	Total power input	kW	76,23	79,84	89,75	101,63	113,95	128,22
	EER (EN 14511-2013) (*)		3,43	3,46	3,32	3,55	3,38	3,34
ESEER (**)			4,15	4,21	4,48	4,09	4,15	4,17
Max current		A	175,00	310,50	326,90	453,60	471,60	497,60
Current at start		A	283,8	316,9	333,3	455,8	481,2	507,2
Scroll Compressors		n°	6	6	6	4	4	4
Refrigerant Circuits		n°	2	2	2	2	2	2
Capacity steps		n°	6	6	6	4	4	4
Supply voltage		V/Ph/Hz	400/3/50					
Sound power Lw (***)		dB(A)	82,10	82,7	83,8	86,6	86,6	87,2
Sound pressure Lp (***)		dB(A)	49,9	50,5	51,6	54,3	54,3	54,8
USER PLANT HEAT EXCHANGER								
Fluid type		-	water					
Brazed plate exchanger		n°	1	1	1	1	1	1
Fluid flow (A35/W7)		l/s	9,38	10,00	10,96	12,99	13,86	15,57
Pressure drops (A35/W7)		kPa	40,33	40,56	39,03	50,14	39,90	40,76
FAN SECTION								
Axial fans		n°	4	4	4	4	6	6
Total air flow		m^3/s	19,23	18,24	17,37	28,27	28,27	25,31
Rotation speed		min^{-1}	720	720	720	720	720	720
Unit power input		kW	1,19	1,19	1,19	1,19	1,19	1,19
Unit current input		A	2,05	2,05	2,05	2,05	2,05	2,05
SIZES AND WEIGHT								
Lenght		mm	4125	4125	4125	5125	5125	5125
Width		mm	2205	2205	2205	2205	2205	2205
Height		mm	2266	2266	2266	2266	2266	2266
Empty weight		kg	1857	1942	2040	2382	2398	2635

(*) Ratio between power output and consumption (without pump) according to EN 14511 : 2013 .
(**) Leaving water temperature 7°C constant.
(***) Noise power according ISO 3744. Sound pressure at 10 meters in free field

ALISEA PLUS

PLANT HYDRONIC KIT TECHNICAL DATA

ALISEA Plus Std unit		136A	146A	156A	234A	284A	304A
PLANT PUMP HYDRONIC KIT (ACCESSORY)							
Fluid flow (A35/W7)	l/s	9,24	10,13	11,09	12,75	14,21	15,75
Safety valve	Bar	6	6	6	6	6	6
Expansion vessels	l	25	25	25	40	40	40
Plant fluid max pressure	Bar	6	6	6	6	6	6
VERSIONS							
1 std pump							
Pump nr.	n°	1	1	1	1	1	1
Available externe pressure	kPa	113	102	93	117	106	123
Single power input	kW	2,2	2,2	2,2	3,0	3,0	4,0
Single current input	A	4,6	4,6	4,6	6,3	6,3	7,8
Empty weight	kg	55	55	55	80	80	80
1 HP pump							
Pump nr.	n°	1	1	1	1	1	1
Available externe pressure	kPa	156	147	149	135	185	176
Single power input	kW	3,0	3,0	4,0	4,0	5,5	5,5
Single current input	A	6,3	6,3	7,8	7,8	10,4	10,4
Empty weight	kg	62	62	62	87	87	87
2 std pumps							
Pump nr.	n°	2	2	2	2	2	2
Available externe pressure	kPa	113	102	93	117	106	123
Single power input	kW	2,2	2,2	2,2	3,0	3,0	4,0
Single current input	A	4,6	4,6	4,6	6,3	6,3	7,8
Empty weight	kg	98	98	98	133	133	133
2 HP pumps							
Pump nr.	n°	2	2	2	2	2	2
Available externe pressure	kPa	156	147	149	135	185	176
Single power input	kW	3,0	3,0	4,0	4,0	5,5	5,5
Single current input	A	6,3	6,3	7,8	7,8	10,4	10,4
Empty weight	kg	112	112	112	147	147	147

PLANT HYDRONIC KIT TECHNICAL DATA

ALISEA Plus Supersilenced unit		136A	146A	156A	234A	284A	304A
PLANT PUMP + BUFFER TANK HYDRONIC KIT (ACCESSORY)							
Fluid flow (A35/W7)	l/s	9,24	10,13	11,09	12,75	14,21	15,75
Safety valve	Bar	6	6	6	6	6	6
Expansion vessels	l	25	25	25	40	40	40
Plant fluid max pressure	Bar	6	6	6	6	6	6
VERSIONS							
1 std pump + buffer tank							
Storage water tank	l	500	500	500	750	750	750
Pump nr.	n°	1	1	1	1	1	1
Available externe pressure	kPa	113	102	93	117	106	123
Single power input	kW	2,2	2,2	2,2	3,0	3,0	4,0
Single current input	A	4,6	4,6	4,6	6,3	6,3	7,8
Empty weight	kg	121	121	121	176	176	176
1 HP pump + buffer tank							
Storage water tank	l	500	500	500	750	750	750
Pump nr.	n°	1	1	1	1	1	1
Available externe pressure	kPa	156	147	149	135	185	176
Single power input	kW	3,0	3,0	4,0	4,0	5,5	5,5
Single current input	A	6,3	6,3	7,8	7,8	10,4	10,4
Empty weight	kg	128	128	128	183	183	183
2 std pumps + buffer tank							
Storage water tank	l	500	500	500	750	750	750
Pump nr.	n°	2	2	2	2	2	2
Available externe pressure	kPa	113	102	93	117	106	123
Single power input	kW	2,2	2,2	2,2	3,0	3,0	4,0
Single current input	A	4,6	4,6	4,6	6,3	6,3	7,8
Empty weight	kg	164	164	164	229	229	229
2 HP pumps + buffer tank							
Storage water tank	l	500	500	500	750	750	750
Pump nr.	n°	2	2	2	2	2	2
Available externe pressure	kPa	156	147	149	135	185	176
Single power input	kW	3,0	3,0	4,0	4,0	5,5	5,5
Single current input	A	6,3	6,3	7,8	7,8	10,4	10,4
Empty weight	kg	178	18	178	243	243	243

ALISEA FC (FREE COOLING)

HIGH EFFICIENCY AIR COOLED FREECOOLING CHILLERS

Cc kW 39,5 ÷ 173,5



- **R410a Multiscroll unit**
- **High efficiency at partial loads**
- **Optional internal hydronic kit**
- **Low noise level**
- **Available in a STD or SUPER SILENT (SLN) version**
- **Standard RS485 card**
- **Wide range of accessories (optional)**
- **Robust and well-finished metalwork**
- **Low seasonal power consumption solution**

MADE IN ITALY

PRODUCT FEATURES

High efficiency air cooled water chillers, for outdoor installations with scroll compressors.
Available in a wide range of models with multi-compressor and cooling capacity 40 up to 180 kW. All units are equipped with scroll compressors, with refrigerant R410A and are designed for optimal energy efficiency, particularly high operating at partial loads. The compactness and the presence of a wide range of equipments and accessories, allow the use of the ALISEA units in any plant environment. Thanks to the construction solutions adopted, installation and maintenance activities are particularly facilitated allowing saving time and money to the installation personnel.

FREE COOLING version

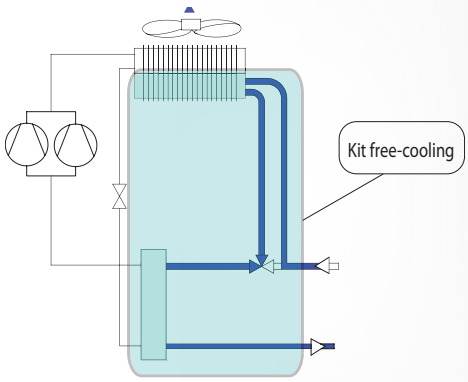

In situations where chilled water is required during periods of low external temperatures, the ALISEA chillers can be integrated with the "Free Cooling Kit". This device use the external air for direct cooling of the medium and enables considerable savings of electrical energy. Free Cooling Kit consists of the following main elements which integrate the equipments already present in the standard ALISEA unit:
- air to water finned coils;
- three-way valve for automatic switching of the medium to be cooled;
- Electronic control with dedicated functions and outside air temperature sensor.

The use of free cooling system involves mixing the water to be cooled with antifreeze fluids The performance data provided in this document refer to the use of ethylene glycol at 30%.
Please refer to the table below to check the correct concentration, based on the minimum outdoor air Temperature at the site of installation.

% ETHYLENE GLYCOL WEIGHT								
	5%	10%	15%	20%	25%	30%	35%	40%
Cooling temperature (°C)	-2.0	-3.9	-6.5	-8.9	-11.8	-15.6	-19.0	-23.4
Safety temperature (°C)	3,0	1,0	-1,0	-4,0	-6,0	-10,0	-14,0	-19,0

OPERATING LOGIC

The system has been designed to optimise power consumption by automatically activating the free cooling kit. As a rule, the adjustment device constantly compares the outside air temperature with the temperature of the fluid to be cooled. If the temperature differential allows, the device enables the cooling mode through the free cooling heat exchanger via the 3-way valve. The "free cooling" operation can be attributed to 3 main scenarios:

1) The outdoor air temperature is higher than the temperature of the fluid entering the chiller.

When this occurs, the free cooling kit is turned off due to the absence of conditions which allow heat to be recovered. The fluid is only cooled down by the compressors.

2) The outdoor air temperature is lower than the temperature of the fluid entering the chiller (min. differential of 2°C).

The free cooling kit is activated. In this context, there are two possible operating conditions determined by the entity of the temperature differential between the two fluids.

• 2A) Combined mode

This condition occurs when the air temperature is slightly lower than the temperature of the fluid. The energy recovery from the free cooling kit is only partial and the missing cooling power is supplied by the supplementary activity of the compressors which are managed automatically by the adjustment.

• 2B) Direct FC mode (100% FC)

The outside air temperature conditions cool the fluid and supply the cooling power required without needing to use the compressors. If the fluid is excessively cooled due to particularly low air temperatures, the electronic control automatically starts the ventilation modulation so that the desired temperature is maintained.

On average, the operating conditions in Direct FC mode (100% FC) are obtained with temperature differentials (air/ fluid to be cooled) between 13 and 18°C, depending on the models.

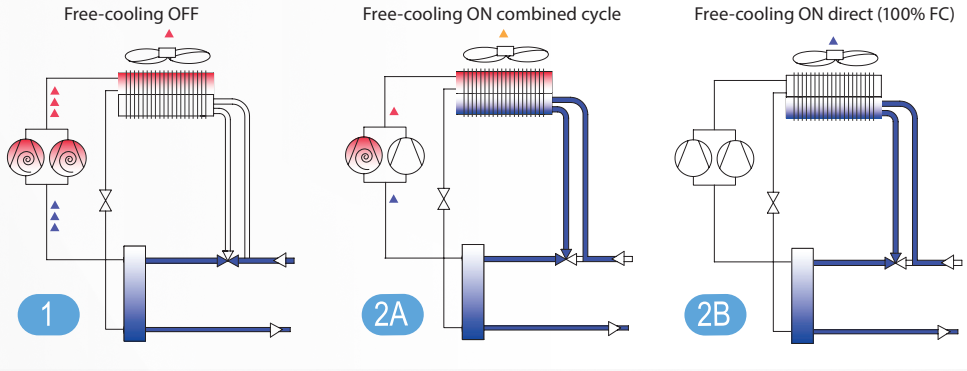

ACCESORIES	
1 pump	Anti-vibration mount feet
1 HP pump	Condensing coils protection grids
2 pumps	Compressors soft starter
2 HP pumps	Coils with prevarnished fins
Refrigerants gauges	Power factor regulator kit (cos φ 0,95)
Top remote control	Electrical panel ventilation / Heating kit
Antifreeze evaporator heater + pipes	Modulating fan speed control
Antifreeze evaporator heater + buffer tank	Electronic thermostatic expansion valve
Compressor crankcase heater di serie	El. Exp. Valve backup battery
Compressor magnetothermal protection	EC Fans

ALISEA FC (FREE COOLING)

TECHNICAL DATA ALISEA FC STD R410A

Freecooling Std unit			102 A	122 A	152 A	123 A	153 A	154 A
A35/W7	Cooling capacity	kW	49,4	60,2	73,4	86,1	111,5	150,5
	Total power input	kW	19,4	22,6	29,1	34	44	57,9
	EER (EN 14511-2013) (*)		2,54	2,65	2,51	2,53	2,52	2,59
PNFC (1)	Rated Cooling power in Free Cooling	kW	54	63,5	82,6	91,8	122,6	165,2
	Ambient temp. (100% PNFC)	°C	-2,5	1	0	1	-1,5	-2,5
Max current		A	40,6	48,8	65,8	75,3	96,4	127,4
Current at start		A	131,1	142,2	172,5	166,4	203	231,8
Scroll Compressors		n°	2	2	2	3	3	4
Refrigerant Circuits		n°	1	1	1	1	1	2
Capacity steps		n°	2	2	2	3	3	4
Supply voltage		V/Ph/Hz	400/3/50					
Sound power Lw (***)		dB(A)	79,5	79,5	83	82,2	84	85,2
Sound pressure Lp (***)		dB(A)	47,8	47,8	51,1	50,3	51,8	53,2
USER PLANT HEAT EXCHANGER								
Brazed plate exchanger		n°	1	1	1	1	1	1
Water flow (A35/W7)		l/s	2,43	2,96	3,61	4,24	5,49	7,41
Water section pressure drops (**)		kPa	61,76	87,01	80,78	63,45	95,56	121,78
FAN SECTION								
Fans		n°	1	1	2	2	3	3
Air flow		m³/h	23000	22500	46000	46000	60000	53000
Rotation speed		min-1	880	880	880	880	880	880
Unit power input		kW	1,9	1,9	1,9	1,9	1,9	1,9
Unit current input		A	4,2	4,2	4,2	4,2	4,2	4,2
SIZES AND WEIGHT								
Lenght		mm	3005	3005	3005	3005	4255	4255
Width		mm	1123	1123	1123	1123	1123	1123
Height		mm	1954	1954	1954	1954	1954	1954
Weight (****)		Kg	788	832	845	1004	1150	1326
WATER SECTION (OPTIONAL)								
Storage water tank		l	n.a	n.a	n.a	n.a	n.a	n.a
Plant side expansion vessel		l	6	6	10	10	10	18
Max. water pressure		kPa	600	600	600	600	600	600
Nitrogen pre-charge pressure		kPa	150	150	150	150	150	150
Weight P1 hydronic kit		Kg	49	49	66	66	70	82
Weight P2 hydronic kit		Kg	77	77	100	100	108	120
USER PLANT STD PUMP		n°	1	1	1	1	1	1
Available externe pressure		kPa	101	70	67	76	64	40
Power input		kW	1,1	1,1	1,5	1,5	2	2,5
Current input		A	1,96	1,96	2,51	2,51	3,41	4,53
USER PLANT HP PUMP		n°	1	1	1	1	1	1
Available externe pressure		kPa	183	148	145	156	105	97
Power input		kW	1,9	1,9	2,5	2,5	2,5	3,3
Current input		A	3,08	3,08	4,53	4,53	4,53	5,86

(1) The cooling power provided when the compressors are working at full load under the following conditions: Fluid: 70/30% water/ethylene glycol - IN/OUT fluid temp. 15-10°C - Ambient temp. 35°C
A7/W35 with the compressors working at 100%
FCNP Free cooling nominal power (the CP provided when working mechanically (with the compressors active) under these conditions: Fluid temp. 15/10°C Est. air temp. 35°C
(*) Ratio of the heating/cooling capacity to the total effective power input (without pump) according to EN 14511 Regulation
(**) FC exchangers + 3-way valve + pipes, at the nominal flow rate with 70/30% water/ethylene glycol
(***) Noise pressure according to ISO 3744. Sound pressure at 10 meters in free field
(****) Empty weight.
n.a.: Not available

TECHNICAL DATA ALISEA FC SLN R410A

Freecooling Supersilenced unit (SLN)			102 A	122 A	152 A	123 A	153 A
A35/W7	Cooling capacity	kW	47,3	57,2	70,2	82,4	106,7
	Total power input	kW	19,6	23,3	28,9	32,6	43,4
	EER (EN 14511-2013) (*)		2,41	2,44	2,41	2,52	2,45
PNFC (1)	Rated Cooling power in Free Cooling	kW	51,8	64,1	79,5	92,8	119,2
	Ambient temp. (100% PNFC)	°C	-3	-1	2,5	-1	-0,5
Max current		A	40,8	50,2	65,4	73,2	96
Current at start		A	131,1	143,6	172,1	164,3	202,6
Scroll Compressors		n°	2	2	2	3	3
Refrigerant Circuits		n°	1	1	1	1	1
Capacity steps		n°	2	2	2	3	3
Supply voltage		V/Ph/Hz			400/3/50		
Sound power Lw (***)		dB(A)	76,4	78,8	80	79,1	80,8
Sound pressure Lp (***)		dB(A)	44,7	46,9	48,2	47,2	49
USER PLANT HEAT EXCHANGER							
Brazed plate exchanger		n°	1	1	1	1	1
Water flow (A35/W7)		l/s	2,33	2,81	3,45	4,05	5,25
Water section pressure drops (**)		kPa	56,6	78,6	73,9	58,1	87,5
FAN SECTION							
Fans		n°	1	2	2	2	3
Air flow		m³/h	19500	37000	35200	35000	49400
Rotation speed		min-1	690	690	690	690	690
Unit power input		kW	1,3	1,3	1,3	1,3	1,3
Unit current input		A	2	2	2	2	2
SIZES AND WEIGHT							
Lenght		mm	3005	3005	3005	3005	4255
Width		mm	1123	1123	1123	1123	1123
Height		mm	1954	1954	1954	1954	1954
Weight (****)		Kg	806	884	909	1022	1268
WATER SECTION (OPTIONAL)							
Storage water tank		l	n.a	n.a	n.a	n.a	n.a
Plant side expansion vessel		l	6	6	10	10	10
Max. water pressure		kPa	600	600	600	600	600
Nitrogen pre-charge pressure		kPa	150	150	150	150	150
Weight P1 hydronic kit		Kg	49	60	66	66	70
Weight P2 hydronic kit		Kg	77	90	100	100	108
USER PLANT STD PUMP		n°	1	1	1	1	1
Available externe pressure		kPa	107	80	75	84	75
Power input		kW	1,1	1,1	1,5	1,5	2
Current input		A	1,96	1,96	2,51	2,51	3,41
USER PLANT HP PUMP		n°	1	1	1	1	1
Available externe pressure		kPa	188	160	153	163	116
Power input		kW	1,9	1,9	2,5	2,5	2,5
Current input		A	3,08	3,08	4,53	4,53	4,53

(1) The cooling power provided when the compressors are working at full load under the following conditions: Fluid: 70/30% water/ethylene glycol - IN/OUT fluid temp. 15-10°C - Ambient temp. 35°C
A7/W35 with the compressors working at 100%
FCNP Free cooling nominal power (the CP provided when working mechanically (with the compressors active) under these conditions: Fluid temp. 15/10°C Est. air temp. 35°C
(*) Ratio of the heating/cooling capacity to the total effective power input (without pump) according to EN 14511 Regulation
(**) FC exchangers + 3-way valve + pipes, at the nominal flow rate with 70/30% water/ethylene glycol
(***) Noise pressure according to ISO 3744. Sound pressure at 10 meters in free field
(****) Empty weight.
n.a.: Not available

ALISEA FC (FREE COOLING)

FREE-COOLING STD UNIT PERFORMANCE

FREE-COOLING STD UNIT PERFORMANCE

			DT									
	Model		2	4	6	8	10	12	14	16	18	20
Standard STD	**102**	kW	6,2	12,4	18,4	24,6	30,8	37	43,2	49,6	55,8	62
	122	kW	9	18	27,4	36,2	45,4	54,6	63,8	73,2	82,4	91,8
	152	kW	11,2	22,2	33,4	44,6	55,8	67	78,2	89,4	100,8	112,2
	123	kW	13,2	25,8	39,6	52,8	66,2	79,4	92,8	106,2	119,6	133,2
	153	kW	15	29,8	44,8	59,6	74,6	89,6	104,6	119,8	135	150,2
	154	kW	18,6	37	55,6	74,4	93	111,8	130,8	149,8	168,8	187,8

PNFC Free Cooling power ratio

		PNFC
Model		
102	kW	54
122	kW	63,5
152	kW	82,6
123	kW	91,8
153	kW	122,6
154	kW	165,2

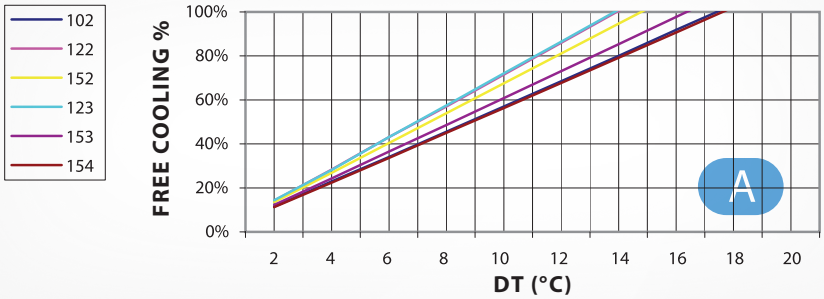

PNFC Free Cooling power ratio:
the cooling power provided when working mechanically (with the compressors active) at full load under the following conditions:
- Water/ethylene glycol: 70/30%
- IN/OUT fluid temp.: 15/10°C
- Ambient temp.: 35°C

DT: the difference in temperature between the outside air and the fluid entering the chiller.

Graphs A and B identify the TD as the point when the Free Cooling function reaches 100% of its FCNP nominal capacity. The percentage of the cooling power being provided, according to the change in TD, can also be seen quickly from these graphs.

FREE-COOLING SUPERSILENCED UNIT PERFORMACE

			DT									
	Model		2	4	6	8	10	12	14	16	18	20
Standard SLN	**102**	kW	5,6	11,2	17,0	22,6	28,2	34,0	39,6	45,4	51,0	56,8
	122	kW	8,0	15,8	23,8	31,8	39,8	48,0	56,2	64,2	72,4	80,8
	152	kW	12,2	24,6	37,0	49,4	61,8	74,2	86,8	99,4	112,0	124,8
	123	kW	11,6	23,0	34,6	46,2	57,8	69,4	81,2	93,0	104,6	116,6
	153	kW	15,0	30,2	45,4	60,6	75,8	91,0	106,4	121,8	137,2	152,6

PNFC Free Cooling power ratio

		PNFC
Model		
102	kW	51,8
122	kW	64,1
152	kW	79,5
123	kW	92,8
153	kW	119,2

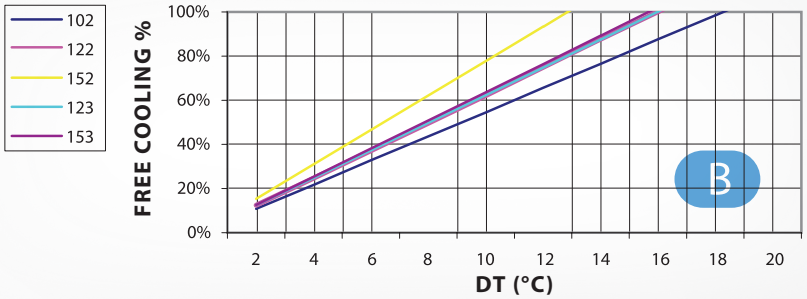

PNFC Free Cooling power ratio:
the cooling power provided when working mechanically (with the compressors active) at full load under the following conditions:
- Water/ethylene glycol: 70/30%
- IN/OUT fluid temp.: 15/10°C
- Ambient temp.: 35°C

DT: the difference in temperature between the outside air and the fluid entering the chiller.

Graphs A and B identify the TD as the point when the Free Cooling function reaches 100% of its FCNP nominal capacity. The percentage of the cooling power being provided, according to the change in TD, can also be seen quickly from these graphs.

EOLIX

AIR COOLED REVERSIBLE HEAT PUMPS

Hc kW 47,8 ÷ 202

Cc kW 38,7 ÷ 170



- **High-efficiency heat pump**
- **R410a Multiscroll unit**
- **High efficiency at partial loads**
- **Optional internal hydronic kit**
- **Low noise level**
- **Available in a STD or SUPER SILENT (SLN) version**
- **Standard RS485 card**
- **Wide range of accessories (optional)**
- **Robust and well-finished metalwork**

MADE IN ITALY

PRODUCT FEATURES

Air cooled reversible heat pumps for outdoor installations with scroll compressors.

Available in a wide range of models with multi-compressor and heating capacity from 50 up to 200 kW. All units are equipped with scroll compressors, with refrigerant R410A and are designed for optimal energy efficiency, particularly high operating at partial loads. The compactness and the presence of a wide range of equipments and accessories, both for standard and low noise version, allow the use of the Eolix units in different type of plants. Thanks to the construction solutions adopted, installation and maintenance activities are particularly facilitated allowing saving time and money to the installation personnel.

ACCESSORIES

ACCESORIES	
1 pump	Nordic kit
1 HP pump	Compressor crankcase heater (included)
2 pumps	Compressor magnetothermal protection
2 HP pumps	Anti-vibration mount feet
1 pump + buffer tank in series	Condensing coils protection grids
1 HP pump + buffer tank in series	Compressors soft starter
2 pumps + buffer tank in series	Coils with prevarnished fins
2 HP pumps + buffer tank in series	Power factor regulator kit (cos φ 0,95)
Partial heat recovery (desuperheater)	Electrical panel ventilation / Heating kit
Refrigerants gauges	Modulating fan speed control
Top remote control	Electronic thermostatic expansion valve
Antifreeze evaporator heater + pipes	El. Exp. Valve backup battery
Antifreeze evaporator heater + buffer tank	EC Fans

EOLIX

AIR COOLED REVERSIBLE HEAT PUMPS

Eolix Std unit			082 A	102 A	122 A	152 A	123 A	133 A	153 A	134 A	154 A	126 A
	Energetic class		A+	A+	A+							
A35/W7	Cooling capacity	kW	38,7	48,7	57,3	74,4	82,8	91,9	110,4	123,3	148,7	170,0
	Total power input	kW	16,2	19,8	23,1	29,6	34,7	37,4	42,9	48,6	58,9	68,7
	EER (EN 14511-2013) (*)		2,4	2,5	2,5	2,5	2,4	2,5	2,6	2,5	2,5	2,5
A35/W18	Cooling capacity	kW	53,0	66,7	78,6	101,9	113,6	129,0	151,1	172,9	203,7	233,2
	Total power input	kW	16,9	20,7	24,3	31,5	26,4	39,5	45,7	51,4	62,7	72,3
	EER (EN 14511-2013) (*)		3,1	3,2	3,2	3,2	3,1	3,3	3,3	3,4	3,2	3,2
A7/W35	Heating capacity	kW	47,4	54,6	66,2	91,8	103,1	114,6	132,8	147,6	177,1	200,2
	Total power input	kW	12,3	13,9	17,2	23,9	26,7	29,9	33,9	38,5	45,8	51,5
	COP (EN 14511-2013) (*)		3,8	3,9	3,8	3,8	3,8	3,8	3,9	3,8	3,8	3,9
A7/W45	Heating capacity	kW	46,2	53,2	64,6	83,5	100,4	108,5	121,1	140,1	161,5	195,4
	Total power input	kW	14,8	16,9	21,0	28,1	32,5	35,7	40,3	46,3	54,4	63,1
	COP (EN 14511-2013) (*)		3,1	3,1	3,1	3,0	3,1	3,0	3,0	3,0	3,0	3,1
A2/W35	Heating capacity	kW	41,6	47,9	58,3	80,6	90,7	99,8	116,8	128,7	155,7	176,2
	Total power input	kW	12,1	13,7	16,9	23,5	26,3	29,4	33,4	37,9	45,2	50,8
	COP (EN 14511-2013) (*)		3,4	3,5	3,4	3,4	3,4	3,4	3,5	3,4	3,4	3,4
A2/W45	Heating capacity	kW	41,0	47,3	57,5	72,7	31,9	95,9	105,7	124,0	141,0	173,8
	Total power input	kW	14,6	16,6	20,6	27,7	31,9	35,2	39,6	45,7	53,4	61,9
	COP (EN 14511-2013) (*)		2,8	2,8	2,8	2,6	2,8	2,7	2,6	2,7	2,6	2,8
	ESEER (**)		3,38	3,61	3,75	3,79	3,68	3,75	3,82	3,51	3,73	3,78
	Max current	A	36,0	40,6	48,8	65,8	75,3	84,0	94,5	109,2	127,4	146,4
	Current at start	A	112,8	131,1	142,2	172,5	166,4	166,4	201,2	188,7	231,8	235,2
	Scroll Compressors	n°	2	2	2	2	3	3	3	4	4	6
	Refrigerant Circuits	n°	1	1	1	1	1	1	1	2	2	2
	Capacity steps	n°	2	2	2	2	3	3	3	4	4	6
	Supply voltage	V/Ph/Hz					400/3/50					
	Sound power Lw (***)	dB(A)	79,5	79,5	79,5	83	82,2	82,2	83,7	82,5	85,2	84,3
	Sound pressure Lp (***)	dB(A)	47,8	47,8	47,8	51,1	50,3	50,3	51,8	50,7	53,2	52,3
	USER PLANT HEAT EXCHANGER											
	Brazed plate exchanger	n°	1	1	1	1	1	1	1	1	1	1
	Water flow (A35/W7)	l/s	1,89	2,37	2,79	3,63	4,04	4,46	5,38	6,18	7,25	8,29
	Pressure drops (A35/W7)	kPa	21,6	26,8	25,7	25,4	18,7	22,8	22,9	31,3	35,8	34,4
	FAN SECTION											
	Fans	n°	1	1	1	2	2	2	2	2	3	3
	Air flow	m^3/h	21800	20600	20600	43600	42000	42000	42000	41200	62600	56800
	Rotation speed	min^{-1}	880	880	880	880	880	880	880	880	880	880
	Unit power input	kW	1,9	1,9	1,9	1,9	1,9	1,9	1,9	1,9	1,9	1,9
	Unit current input	A	4,2	4,2	4,2	4,2	4,2	4,2	4,2	4,2	4,2	4,2
	SIZES AND WEIGHT											
	Lenght	mm	1955	1955	1955	3005	3005	3005	3005	3005	4255	4255
	Width	mm	1123	1123	1123	1123	1123	1123	1123	1123	1123	1123
	Height	mm	1954	1954	1954	1954	1954	1954	1954	1954	1954	1954
	Weight	kg	578	603	609	751	828	830	882	991	1115	1320
	WATER SECTION (OPTIONAL)											
	Storage water tank	l	150	150	150	300	300	300	300	300	300	300
	Expansion vessel	l	5,0	5,0	5,0	8,0	8,0	8,0	8,0	8,0	18,0	18,0
	Max. water pressure	kPa	600	600	600	600	600	600	600	600	600	600
	USER PLANT STD PUMP	n°	1	1	1	1	1	1	1	1	1	1
	Available externe pressure	kPa	139	130	125	117	117	105	84	111	80	96
	Power input	kW	1,1	1,1	1,1	1,47	1,47	1,47	1,47	2,0	2,0	2,5
	Current input	A	2,1	2,1	2,1	2,72	2,72	2,7	2,7	3,65	3,65	5,0
	USER PLANT HP PUMP	n°	1	1	1	1	1	1	1	1	1	1
	Available externe pressure	kPa	172	160	154	156	157	146	127	152	123	154
	Power input	kW	1,4	1,4	1,4	2,0	2,0	2,0	2,0	2,5	2,5	3,5
	Current input	A	2,7	2,7	2,7	3,65	3,65	3,65	3,65	5,0	5,0	6,3

(*) Ratio between power output and consumption (without pump) according to EN 14511 : 2013 .
(** Leaving water temperature 7°C constant.
(***) Noise power according ISO 3744. Sound pressure at 10 meters in free field
NB: Hydronic kits weights are the same as Alisea units.

Eolix Supersilenced unit			082 A	102 A	122 A	152 A	123 A	133 A	153 A	134 A	154 A
	Energetic class		A+	A+	A+						
A35/W7	Cooling capacity	kW	37,9	46,8	57,9	71,6	83,7	91,4	107,4	124,6	143,6
	Total power input	kW	15,8	20,0	23,8	29,5	33,2	36,1	42,9	48,0	58,9
	EER (EN 14511-2013) (*)		2,4	2,3	2,4	2,4	2,5	2,5	2,5	2,6	2,4
A35/W18	Cooling capacity	kW	51,9	64,1	79,4	98,0	114,8	128,3	147,1	174,8	196,7
	Total power input	kW	16,6	21,0	24,9	31,4	34,9	38,2	45,8	50,8	62,9
	EER (EN 14511-2013) (*)		3,1	3,0	3,2	3,1	3,3	3,4	3,	3,4	3,1
A7/W35	Heating capacity	kW	48,1	53,9	68,1	87,3	104,1	111,2	134,0	148,9	178,7
	Total power input	kW	11,6	13,6	17,6	23,1	25,3	29,2	32,4	38,6	44,0
	COP (EN 14511-2013) (*)		4,1	3,9	3,9	3,8	4,1	3,8	4,1	3,85	4,0
A7/W45	Heating capacity	kW	46,7	52,7	66,3	79,8	101,2	105,7	122,1	141,3	162,8
	Total power input	kW	14,1	16,6	21,3	27,4	31,0	35,1	38,8	46,4	52,6
	COP (EN 14511-2013) (*)		3,3	3,2	3,1	2,9	3,3	3,0	3,1	3,0	3,1
A2/W35	Heating capacity	kW	42,2	47,4	59,9	76,8	91,5	97,0	117,8	129,8	157,1
	Total power input	kW	11,4	13,4	17,3	22,7	24,9	28,7	31,9	38,0	43,4
	COP (EN 14511-2013) (*)		3,7	3,5	3,4	3,4	3,7	3,4	3,7	3,4	3,6
A2/W45	Heating capacity	kW	41,5	46,9	58,9	69,8	89,9	93,6	106,6	125,0	142,1
	Total power input	kW	13,9	16,3	21,0	26,9	30,0	34,6	38,1	45,8	51,6
	COP (EN 14511-2013) (*)		3,0	2,9	2,8	2,6	2,9	2,7	2,8	2,7	2,7
ESEER (**)			3,50	3,63	3,57	3,74	3,81	3,74	3,81	3,61	3,67
Sound power Lw (***)		dB(A)	76,4	76,4	78,8	80	79,1	79,1	80,8	80,8	82,3
Sound pressure Lp (***)		dB(A)	44,7	44,7	46,9	48,2	47,2	47,2	48,9	48,7	50,3
FAN SECTION											
Fans		n°	1	1	2	2	2	2	2	3	3
Air flow		m^3/h	16800	16800	36000	34400	34400	34400	33400	49200	47000
Rotation speed		min^{-1}	690	690	690	690	690	690	690	690	690
Unit power input		kW	1,3	1,3	1,3	1,3	1,3	1,3	1,3	1,3	1,3
Unit current input		A	2,0	2,0	2,0	2,0	2,0	2,0	2,0	2,0	2,0
SIZES AND WEIGHT											
Lenght		mm	1955	1955	3005	3005	3005	3005	3005	4255	4255
Width		mm	1123	1123	1123	1123	1123	1123	1123	1123	1123
Height		mm	1954	1954	1954	1954	1954	1954	1954	1954	1954
Weight		kg	595	620	737	769	845	847	900	1116	1139

(*) Ratio between power output and consumption (without pump) according to EN 14511 : 2013 .
(** Leaving water temperature 7°C constant.
(***) Noise power according ISO 3744. Sound pressure at 10 meters in free field
NB: Hydronic kits weights are the same as Alisea units.

EOLIX PLUS

AIR COOLED REVERSIBLE HEAT PUMPS

Hc kW 234,44 ÷ 391,40

Cc kW 192,98 ÷ 322,30



- **High-efficiency heat pump**
- **R410a Multiscroll unit**
- **High efficiency at partial loads**
- **Optional internal hydronic kit**
- **Low noise level**
- **Available in a STD or SUPER SILENT (SLN) version**
- **Standard RS485 card**
- **Wide range of accessories (optional)**
- **Robust and well-finished metalwork**

MADE IN ITALY

PRODUCT FEATURES

High efficiency air cooled reversible heat pumps for outdoor installations with scroll compressors.
Available in a wide range of models with multi-compressor and cooling capacity 230 up to 390 kW. All units are equipped with scroll compressors, with refrigerant R410A and are designed for optimal energy efficiency, particularly high operating at partial loads. The compactness and the presence of a wide range of equipments and accessories, allow the use of the Eolix Plus units in any plant environment.

QUIET OPERATION
All standard models have the compressors assembled into a soundproofed compartment. The noise emission is very low and it is in compliance with the required normal standard. For particularly low noise requirements, a Low Noise version (SLN) is available. In addition to strengthening insulation of the compressor compartment, low speed fans and increased heat exchange surfaces are used in order to ensure high energy efficiency.

WIDE RANGE OF EQUIPMENTS AND ACCESSORIES
Both standard and Low Noise version, can be integrated with options that allow adaptability to various needs of plants character. Among the most used we remember:
- Water section with single pump P1;
- Water section with double pumps P2;
- Water section with pump (single or double) and buffer tank AP1 – AP2; pumps type HP also available APH1 – APH2;
- Buffer tank to be connected in series to the user plant or, with 4 connections, in order to be used as hydronic separator between the unit and the user plant.
- Partial heat recovery HRP;
- Electronic thermostatic valve.

ACCESORIES	
1 pump hydronic kit	Rubber antivibration mountings std/ hydronic kit (1)
1 HP pump hydronic kit	Rubber antivibration mountings hydronic kit (2)
2 pumps hydronic kit	Condensing coils protection grids
2 HP pumps hydronic kit	Compressors soft starter
1 pump hydronic kit + buffer tank	Coils with prevarnished fins
1 HP pump hydronic kit + buffer tank	Condensers fully ECOFIN painted
2 pumps hydronic kit + buffer tank	Condensers with copper fins
2 HP pumps hydronic kit + buffer tank	Power factor regulator kit (cos φ 0,95)
Partial heat recovery (desuperheater) HRP	Electrical panel ventilation / Heating kit
Refrigerants gauges	Modulating fan speed control
Top remote control	Electronic thermostatic expansion valve
Antifreeze evaporator heater + pipes	El. Exp. Valve backup battery
Antifreeze evaporator heater + buffer tank	EC Fans
Nordic kit	A.V mounts (spring type) only pipes
Compressor crankcase heater di serie	A.V mounts (spring type) pumps+buffer tank
Compressor magnetothermal protection	

EOLIX PLUS

TECHNICAL DATA **EOLIX PLUS STD**

Eolix Plus Std unit			ZE 136	ZE 146	ZE 156	ZE 234	ZE 284	ZE 304
A7/W35	Heating capacity	kW	234,44	248,85	285,76	321,83	344,98	391,40
	Total power input	kW	59,05	61,65	67,02	79,73	85,20	94,25
	COP (EN 14511-2013) (*)		3,91	3,98	4,20	4,00	3,99	4,09
A7/W45	Heating capacity	kW	225,40	235,96	264,71	313,69	336,53	381,03
	Total power input	kW	70,39	73,40	79,66	98,10	105,24	116,24
	COP (EN 14511-2013) (*)		3,17	3,18	3,29	3,18	3,17	3,25
A2/W35	Heating capacity	kW	207,65	220,09	252,82	285,69	306,05	346,86
	Total power input	kW	58,42	60,96	66,26	79,65	85,01	94,01
	COP (EN 14511-2013) (*)		3,52	3,57	3,77	3,57	3,56	3,65
A2/W45	Heating capacity	kW	201,65	210,39	234,33	280,52	301,12	340,55
	Total power input	kW	69,84	72,69	78,64	98,00	105,18	116,03
	COP (EN 14511-2013) (*)		2,87	2,87	2,96	2,85	2,84	2,91
A35/W7	Cooling capacity	kW	192,98	203,12	227,99	266,61	286,55	322,30
	Total power input	kW	70,80	75,08	81,57	96,15	105,62	116,70
	EER (EN 14511-2013) (*)		2,69	2,67	2,76	2,75	2,68	2,73
A35/W18	Cooling capacity	kW	262,43	273,31	302,62	359,46	387,70	435,65
	Total power input	kW	76,69	81,74	88,99	102,71	114,53	126,66
	EER (EN 14511-2013) (*)		3,33	3,26	3,32	3,45	3,31	3,36
ESEER (**)			3,78	3,79	4,14	3,70	3,81	3,88
Max current		A	181,60	189,80	206,20	242,20	260,20	286,20
Current at start		A	283,8	316,9	333,3	463,2	481,2	507,2
Scroll Compressors		n°	6	6	6	4	4	4
Refrigerant Circuits		n°	2	2	2	2	2	2
Capacity steps		n°	6	6	6	4	4	4
Supply voltage		V/Ph/Hz	400/3/50					
Sound power Lw (***)		dB(A)	85,2	85,8	87,8	89,7	89,6	90,2
Sound pressure Lp (***)		dB(A)	53	53,5	55,4	57,2	57,3	57,8
USER PLANT HEAT EXCHANGER								
Fluid type		-	water					
Brazed plate exchanger		n°	1	1	1	1	1	1
Water flow (A35/W7)		l/s	9,22	9,70	10,89	12,74	13,69	15,40
Pressure drops (A37/W7)		kPa	38,95	38,23	38,57	48,22	38,90	39,85
FAN SECTION								
Axial fans		n°	4	4	4	6	6	6
Total air flow		m³/s	23,73	2,73	22,80	355,06	35,06	33,56
Rotation speed		min^{-1}	885	885	885	885	885	885
Unit power input		kW	1,70	1,70	1,70	1,70	1,70	1,70
Unit current input		A	3,70	3,70	3,70	3,70	3,70	3,70
SIZES AND WEIGHT								
Lenght		mm	4125	4125	4125	5125	5125	5125
Width		mm	2205	2205	2205	2205	2205	2205
Height		mm	2266	2266	2266	2266	2266	2266
Empty weight		kg	1841	1848	1944	2356	2375	2499

(*) Ratio between power output and consumption (without pump) according to EN 14511 : 2013 .
(**) Leaving water temperature 7°C constant.
(***) Noise power according ISO 3744. Sound pressure at 10 meters in free field

TECHNICAL DATA **EOLIX PLUS SLN**

Eolix Plus Supersilenced unit			ZE 136	ZE 146	ZE 156	ZE 234	ZE 284
A7/W35	Heating capacity	kW	237,49	252,73	290,92	325,00	349,23
	Total power input	kW	57,07	59,69	67,47	76,68	82,16
	COP (EN 14511-2013) (*)		4,10	4,17	4,24	4,20	4,19
A7/W45	Heating capacity	kW	227,85	238,76	270,16	316,51	339,86
	Total power input	kW	68,40	71,43	80,17	95,04	102,19
	COP (EN 14511-2013) (*)		3,29	3,31	3,33	3,31	3,29
A2/W35	Heating capacity	kW	209,99	222,75	258,34	288,35	309,17
	Total power input	kW	56,44	58,99	66,76	76,60	81,96
	COP (EN 14511-2013) (*)		3,68	3,73	3,82	3,74	3,73
A2/W45	Heating capacity	kW	203,67	212,71	239,06	282,92	303,90
	Total power input	kW	67,84	70,72	79,15	94,95	102,12
	COP (EN 14511-2013) (*)		2,98	2,98	2,98	2,98	2,98
A35/W7	Cooling capacity	kW	192,07	202,03	234,22	265,47	285,12
	Total power input	kW	69,16	73,50	79,74	93,71	103,33
	EER (EN 14511-2013) (*)		2,74	2,71	2,89	2,81	2,72
A35/W18	Cooling capacity	kW	260,73	271,38	312,60	357,31	385,02
	Total power input	kW	75,25	80,36	86,27	100,56	112,58
	EER (EN 14511-2013) (*)		3,38	3,30	3,53	3,50	3,34
ESEER (**)			4,07	4,07	4,19	4,01	4,09
Max current		A	175,00	183,20	203,70	232,30	250,30
Current at start		A	227,40	310,50	331,10	453,60	471,60
Scroll Compressors		n°	6	6	6	4	4
Refrigerant Circuits		n°	2	2	2	2	2
Capacity steps		n°	6	6	6	4	4
Supply voltage		V/Ph/Hz			400/3/50		
Sound power Lw (***)		dB(A)	82,1	82,7	84,8	86,6	86,6
Sound pressure Lp (***)		dB(A)	49,9	50,5	52,5	54,3	54,3
USER PLANT HEAT EXCHANGER							
Fluid type		-			water		
Brazed plate exchanger		n°	1	1	1	1	1
Water flow (A35/W7)		l/s	9,18	9,65	11,19	12,68	13,62
Pressure drops (A37/W7)		kPa	38,59	37,82	40,71	47,81	38,52
FAN SECTION							
Axial fans		n°	4	4	4	6	6
Total air flow		m^3/s	18,85	18,85	29,09	27,66	27,66
Rotation speed		min^{-1}	720	720	720	720	720
Unit power input		kW	1,19	1,19	1,19	1,19	1,19
Unit current input		A	2,05	2,05	2,05	2,05	2,05
SIZES AND WEIGHT							
Lenght		mm	4125	4125	5125	5125	5125
Width		mm	2205	2205	2205	2205	2205
Height		mm	2266	2266	2266	2266	2266
Empty weight		kg	1965	1977	2198	2512	2531

(*) Ratio between power output and consumption (without pump) according to EN 14511 : 2013 .
(**) Leaving water temperature 7°C constant.
(***) Noise power according ISO 3744. Sound pressure at 10 meters in free field

PLANT HYDRONIC KIT TECHNICAL DATA

Models		136	146	156	234	284	304
PLANT HYDRONIC KIT (ACCESSORY)							
Fluid flow (A35/W7)	l/s	9,24	10,13	11,09	12,75	14,21	15,75
Safety valve	Bar	6	6	6	6	6	6
Expansion vessels	l	25	25	25	40	40	40
Plant fluid max pressure	Bar	6	6	6	6	6	6
VERSIONS							
1 std pump							
Pump nr.	n°	1	1	1	1	1	1
Available externe pressure	kPa	113	102	93	117	106	123
Single power input	kW	2,2	2,2	2,2	3,0	3,0	4,0
Single current input	A	4,6	4,6	4,6	6,3	6,3	7,8
Empty weight	kg	55	55	55	80	80	80
1 HP pump							
Pump nr.	n°	1	1	1	1	1	1
Available externe pressure	kPa	156	147	149	135	185	176
Single power input	kW	3,0	3,0	4,0	4,0	5,5	5,5
Single current input	A	6,3	6,3	7,8	7,8	10,4	10,4
Empty weight	kg	62	62	62	87	87	87
2 std pumps							
Pump nr.	n°	2	2	2	2	2	2
Available externe pressure	kPa	113	102	93	117	106	123
Single power input	kW	2,2	2,2	2,2	3,0	3,0	4,0
Single current input	A	4,6	4,6	4,6	6,3	6,3	7,8
Empty weight	kg	98	98	98	133	133	133
2 HP pumps							
Pump nr.	n°	2	2	2	2	2	2
Available externe pressure	kPa	156	147	149	135	185	176
Single power input	kW	3,0	3,0	4,0	4,0	5,5	5,5
Single current input	A	6,3	6,3	7,8	7,8	10,4	10,4
Empty weight	kg	112	112	112	147	147	147
1 std pump + buffer tank							
Storage water tank	l	500	500	500	750	750	750
Pump nr.	n°	1	1	1	1	1	1
Available externe pressure	kPa	113	102	93	117	106	123
Single power input	kW	2,2	2,2	2,2	3,0	3,0	4,0
Single current input	A	4,6	4,6	4,6	6,3	6,3	7,8
Empty weight	kg	121	121	121	176	176	176
1 HP pump + buffer tank							
Storage water tank	l	500	500	500	750	750	750
Pump nr.	n°	1	1	1	1	1	1
Available externe pressure	kPa	156	147	149	135	185	176
Single power input	kW	3,0	3,0	4,0	4,0	5,5	5,5
Single current input	A	6,3	6,3	7,8	7,8	10,4	10,4
Empty weight	kg	128	128	128	183	183	183
2 std pumps + buffer tank							
Storage water tank	l	500	500	500	750	750	750
Pump nr.	n°	2	2	2	2	2	2
Available externe pressure	kPa	113	102	93	117	106	123
Single power input	kW	2,2	2,2	2,2	3,0	3,0	4,0
Single current input	A	4,6	4,6	4,6	6,3	6,3	7,8
Empty weight	kg	164	164	164	229	229	229
2 HP pumps + buffer tank							
Storage water tank	l	500	500	500	750	750	750
Pump nr.	n°	2	2	2	2	2	2
Available externe pressure	kPa	156	147	149	135	185	176
Single power input	kW	3,0	3,0	4,0	4,0	5,5	5,5
Single current input	A	6,3	6,3	7,8	7,8	10,4	10,4
Empty weight	kg	178	18	178	243	243	243

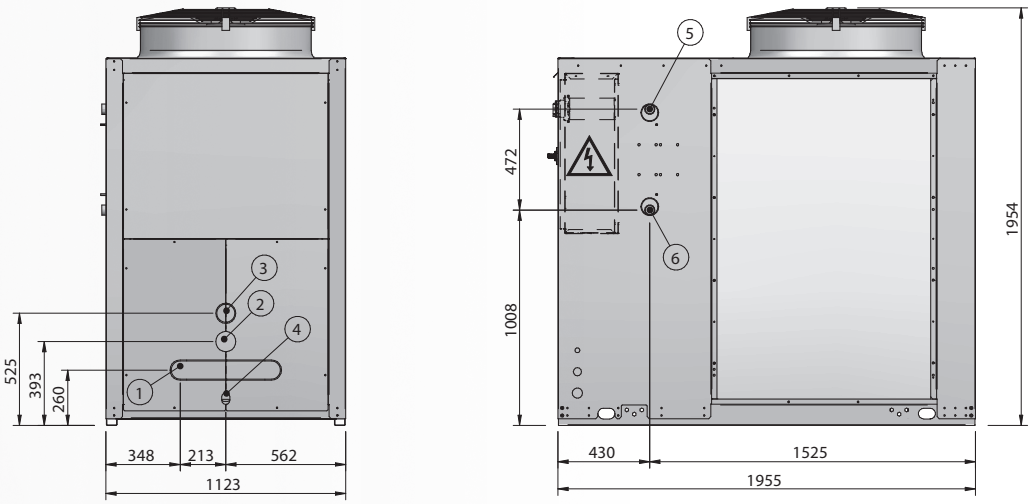

		STD SERIE				
		1	2	4	5	6
	Size	IN	OUT	STORAGE DRAIN	RECOVERED OUT	RECOVERED IN
Alisea - Eolix STD	082	1" ½	1" ½	½ M	1" ½	1" ½
	102	1" ½	1" ½	½ M	1" ½	1" ½
	122	1" ½	1" ½	½ M	1" ½	1" ½
Alisea - Eolix Low Noise	082	1" ½	1" ½	½ M	1" ½	1" ½
	102	1" ½	1" ½	½ M	1" ½	1" ½

	Alisea		Eolix	
Model	STD	SLN	STD	SLN
082	X	X	X	X
102	X	X	X	X
122	X		X	

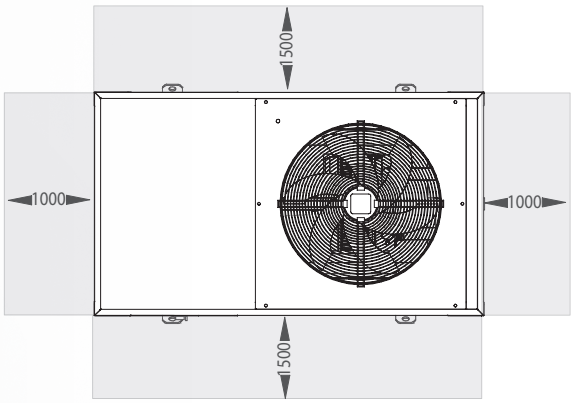

OPERATING SPACES

ALISEA AND EOLIX SIZES AND OPERATING SPACES

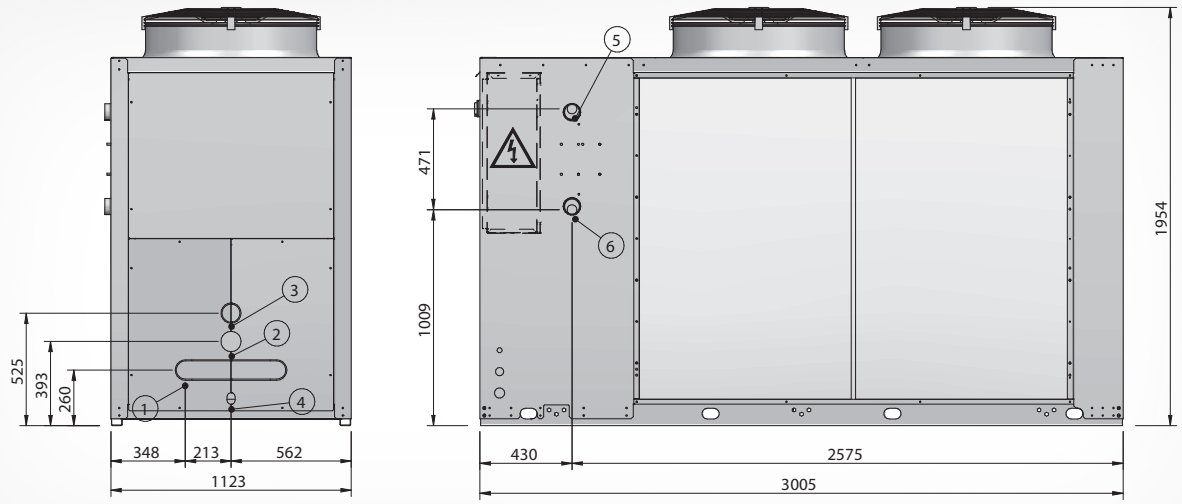

		STD SERIE				
		1	2	4	5	6
	Size	IN	OUT	STORAGE DRAIN	RECOVERED OUT	RECOVERED IN
Alisea - Eolix STD	152	2"	2"	½ M	2"	2"
	123	2"	2"	½ M	2"	2"
	133	2"	2"	½ M	2"	2"
	153	2"	2"	½ M	2"	2"
	134	2" ½	2" ½	½ M	2" ½	2" ½
Alisea - Eolix Low Noise	122	1" ½	1" ½	½ M	1" ½	1" ½
	152	2"	2"	½ M	2"	2"
	123	2"	2"	½ M	2"	2"
	133	2"	2"	½ M	2"	2"
	153	2"	2"	½ M	2"	2"
Alisea Free Cooling STD	102	1" ½	1" ½			
	122	1" ½	1" ½			
	152	2"	2"			
	123	2"	2"			
Alisea Free Cooling Low Noise	102	1" ½	1" ½			
	122	1" ½	1" ½			
	152	2"	2"			
	123	2"	2"			

* 1 fan only

	Alisea		Eolix		Alisea F.C.	
Model	STD	SLN	STD	SLN	STD	SLN
102					X *	X *
122		X		X	X *	X
152	X	X	X	X	X	X
123	X	X	X	X	X	X
133	X	X	X	X		
153	X	X	X	X		
134	X	X	X			

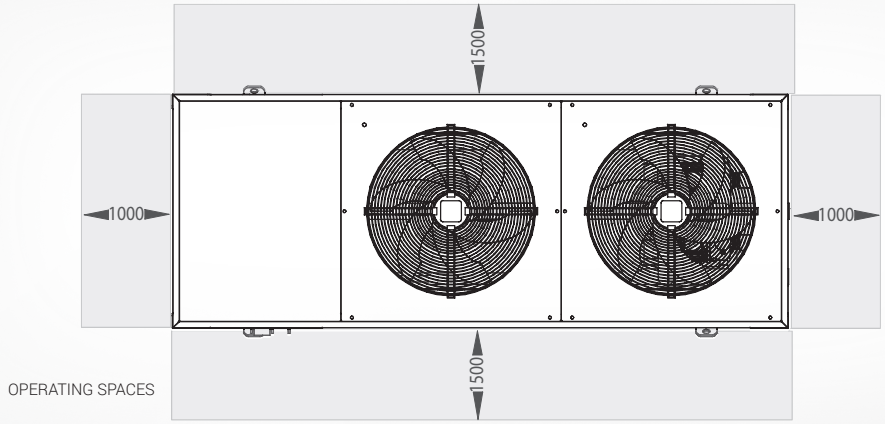

OPERATING SPACES

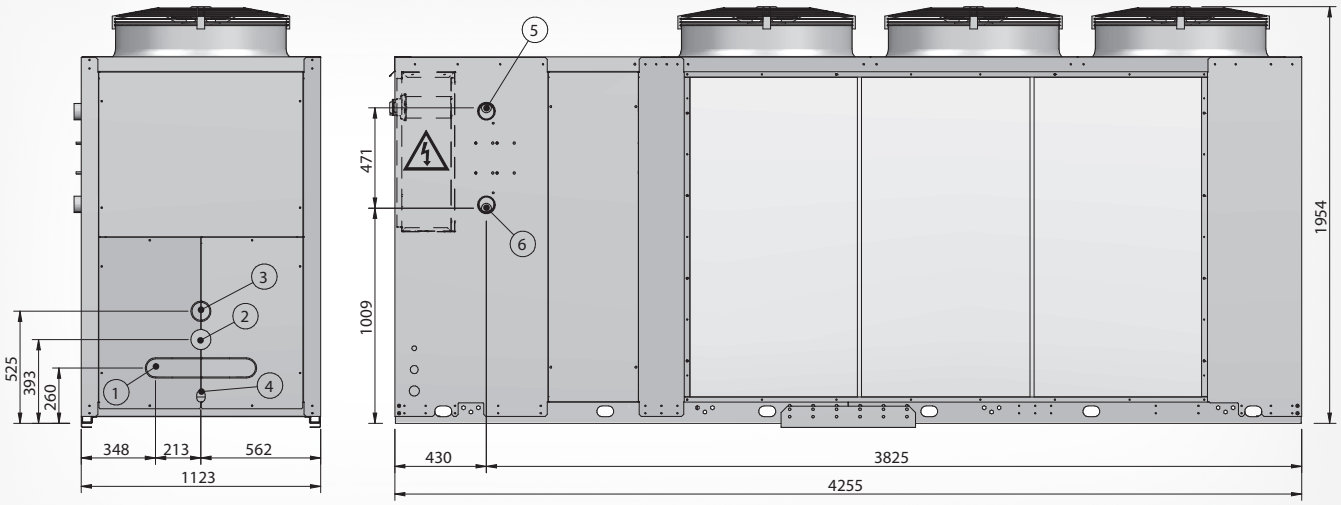

		STD SERIE				
		1	2	4	5	6
	Size	IN	OUT	STORAGE DRAIN	RECOVERED OUT	RECOVERED IN
Alisea - Eolix STD	154	2" ½	2" ½	½ M	2" ½	2" ½
	126	2" ½	2" ½	½ M	2" ½	2" ½
Alisea Low Noise	134	2" ½	2" ½	½ M	2" ½	2" ½
	154	2" ½	2" ½	½ M	2" ½	2" ½
	126	2" ½	2" ½	½ M	2" ½	2" ½
Eolix Low Noise	134	2" ½	2" ½	½ M	2" ½	2" ½
	154	2" ½	2" ½	½ M	2" ½	2" ½
Alisea Free Cooling STD	153	2"	2"			
	154	2" ½	2" ½			
Alisea Free Cooling Low Noise	102	2"	2"			

	Alisea		Eolix		Alisea F.C.	
Model	STD	SLN	STD	SLN	STD	SLN
153					X	X
134		X		X		
154	X	X	X	X	X	
126	X	X	X			

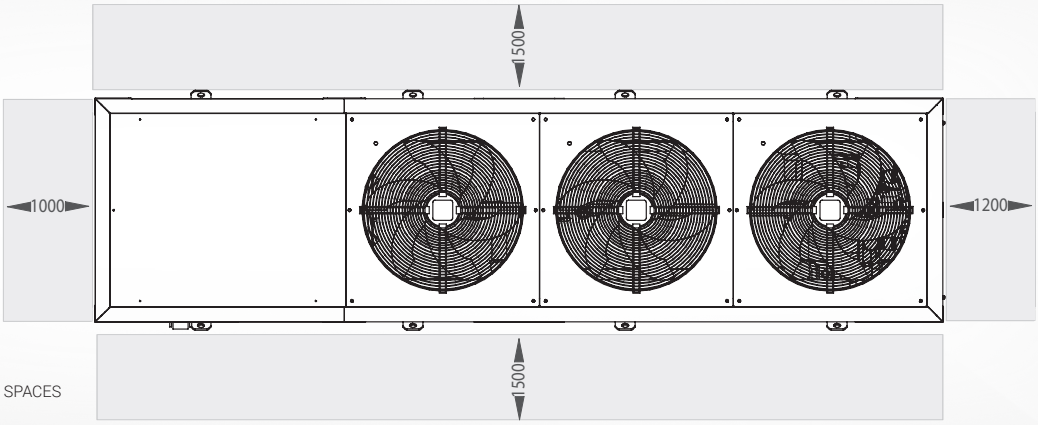

OPERATING SPACES

ALISEA AND EOLIX PLUS SIZES AND OPERATING SPACES

HYDRAULIC CONNECTIONS

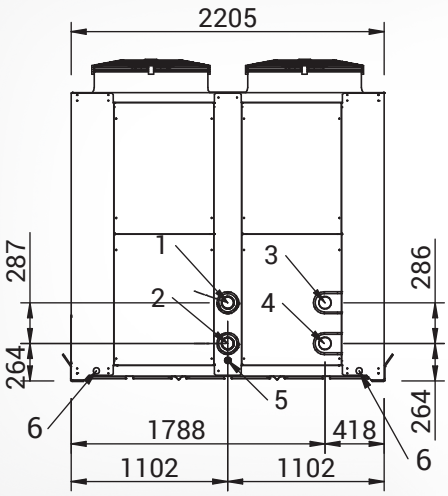

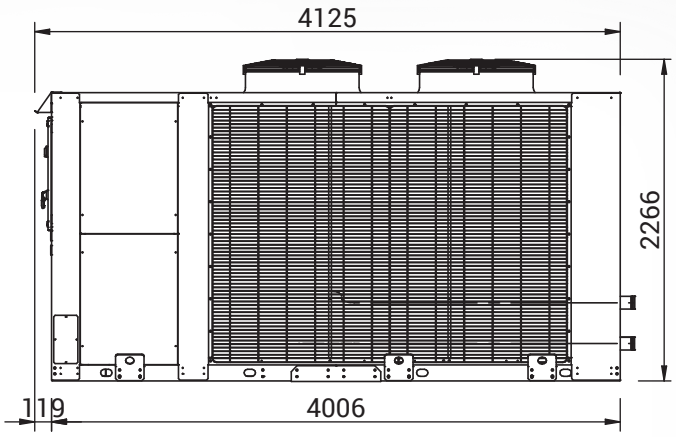

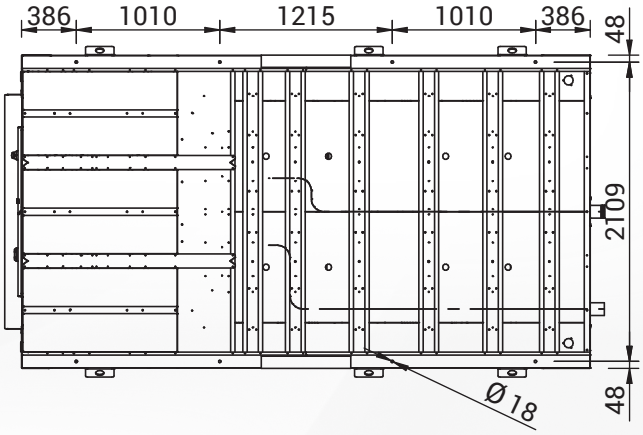

A.V. MOUNTS

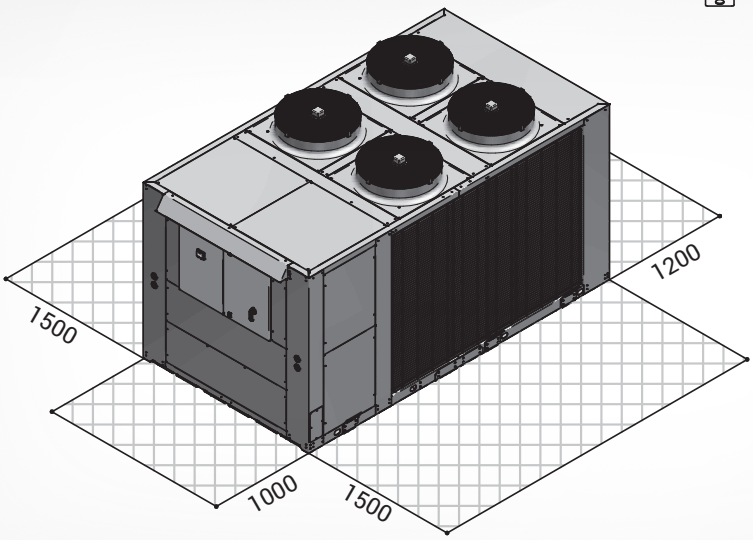

OPERATING SPACES

	Alisea Plus		Eolix Plus	
Model	STD	SLN	STD	SLN
136	X	X	X	X
146	X	X	X	X
156	X	X	X	

			Plant		Partial recovery		Total recovery		Storage drain	Condensate drain pipe
	Version	Model	1	2	3	4	3	4	5	6
			IN	OUT	OUT	IN	OUT	IN	OUT	OUT
Alisea Plus	STD	136 - 146 - 156	3"	3"	1"1/2	1"1/2	3"	3"	1" M Gas	Ø 40
	SLN	136 - 146 - 156	3"	3"	1"1/2	1"1/2	3"	3"	1" M Gas	Ø 40
Eolix Plus	STD	136 - 146 - 156	3"	3"	1"1/2	1"1/2	-	-	1" M Gas	Ø 40
	SLN	136 - 146	3"	3"	1"1/2	1"1/2	-	-	1" M Gas	Ø 40

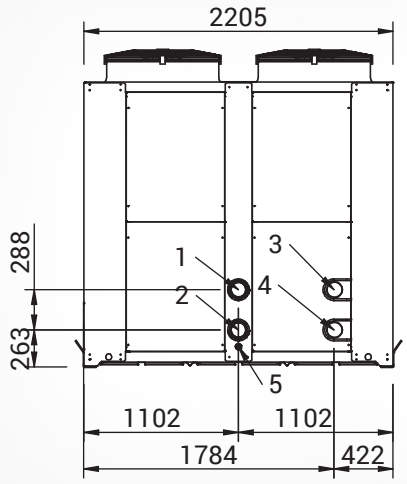

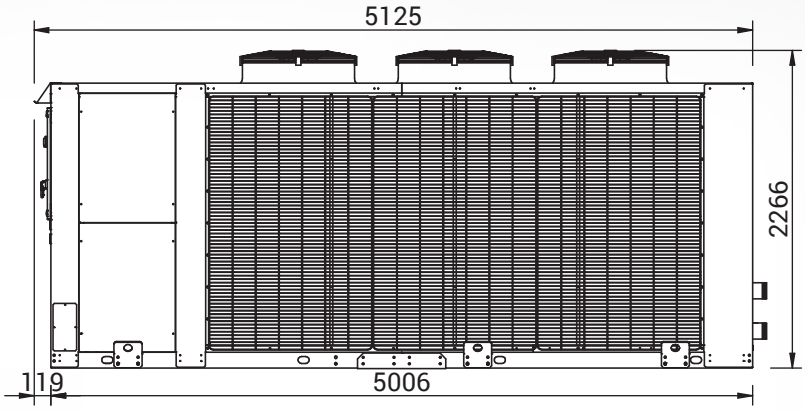

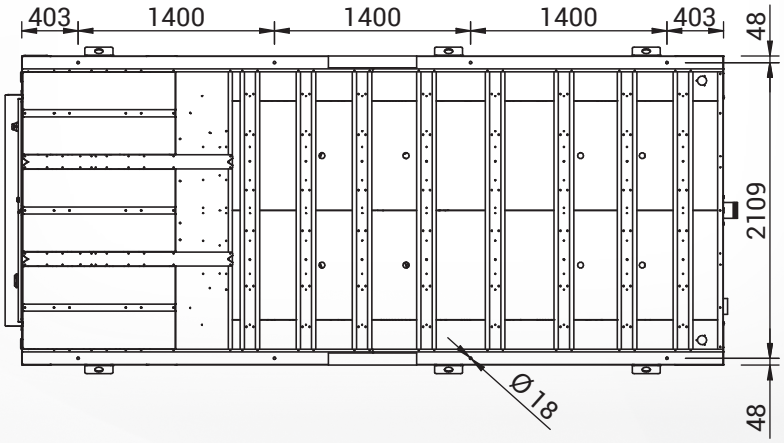

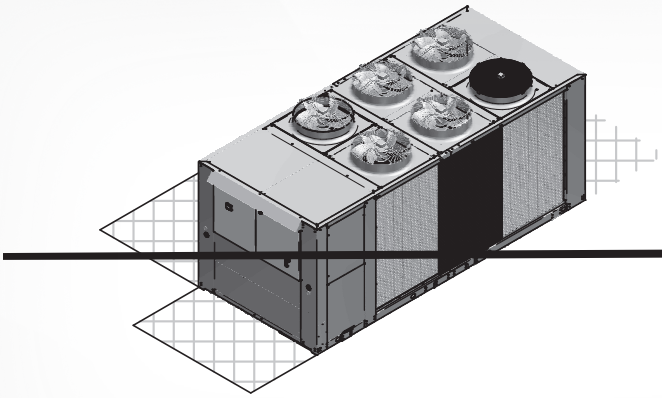

Model	STD	SLN	STD	SLN
156				X
234	X	X	X	X
284	X	X	X	X
304	X	X	X	

ALISEA MOTOCONDENSANTE

AIR COOLED CONDENSING UNITS

Cc kW 41,8 -183

- **Compact dimensions**
- **Low noise level**
- **Load-bearing and robust structure**
- **Available in a MCS or SUPER SILENT (MCL) version**



PRODUCT FEATURES

Air cooled condensing unit for outdoor installation complete with microprocessoor control device. Packaged unit assembled in a polyester powder painted galvanised steel frame.

Scroll compressors R410A. Condensing coil with copper pipes mechanically expanded into aluminium fins. Axial fan with rotating stator blades. Refrigeration circuit complete with filter drier and liquid/moisture indicator. Microprocessor regulation to control all the working parameters and active components in the circuit. Fan speed control (by temp. sensor) and condensing coil protection grills supplied as standard. The standard units are equipped with a control panel assembled into steel box and wired. It includes a microprocessor control device which control the compressor working according to a free voltage signal coming from any control device locatec into the room (p.e room thermostat or duct thermostat). The microprocessor devices manages all the inputs coming from the safety devices on board and the compressor timing. A display screen shows the compressor status and the alarm code when arised.
Available versions: MCS and MCL.
MCL: Provides for the use of capacitors with an increased exchange surface, lower fan rotation speed and sound-insulated compressor section.
CUSTOMIZING POSSIBLE FOR DIMENSIONS, CAPACITIES AND TEMPERATURE CONDITIONS.

ACCESORIES	
Refrigerants gauges	Liquid receiver
Anti-vibration mount feet	Winter head pressure ctrl.
Top remote control	Hot gas bypass

ALISEA MOTOCONDENSANTE

TECHNICAL DATA

ALISEA MCS		082A	102A	122A	152A	123A	133A	153A	134A	154A	126A
Cooling capacity	kW	41,8	52,6	61,9	80,5	89,5	99,7	119,5	124,4	161	183
Power input	kW	16,1	19,7	23	29,5	34,5	37,2	42,8	53	58,7	68,3
Scroll Compressors	n°	2	2	2	2	3	3	3	4	4	6
Refrigerant Circuits	n°	1	1	1	1	1	1	1	2	2	2
Capacity steps	%	2	2	2	2	3	3	3	4	4	6
Supply voltage	V/Ph/Hz	400/3/50									
Max current *	A	36	40,6	48,8	65,8	75,3	84	94,5	109,2	127,4	146,4
Current at start *	A	112,8	131,1	142,2	172,5	166,4	166,4	201,2	188,7	231,8	235,2
FAN SECTION											
Fans	n°	1	1	1	2	2	2	2	2	3	3
Total air flow	m³/h	21800	21200	21200	44400	44400	44400	43400	42400	66000	62580
Rotation speed	min-1	880	880	880	880	880	880	880	880	880	880
Power input (single fan)	kW	1,9	1,9	1,9	1,9	1,9	1,9	1,9	1,9	1,9	1,9
Current input (single fan)	A	4,2	4,2	4,2	4,2	4,2	4,2	4,2	4,2	4,2	4,2
NOISE DATA											
Sound power LwA	dB(A)	79,5	79,5	79,5	83	82,2	82,2	83,7	82,5	85,2	84,3
Sound pressure LpA (2)	dB(A)	47,8	47,8	47,8	51,1	50,3	50,3	51,8	50,7	53,2	52,3
SIZES AND WEIGHT											
Lenght	mm	1955	1955	1955	3005	3005	3005	3005	3005	4255	4255
Depth	mm	1123	1123	1123	1123	1123	1123	1123	1123	1123	1123
Height	mm	1954	1954	1954	1954	1954	1954	1954	1954	1954	1954
Indicative weight	Kg	528	553	559	701	778	780	832	941	1065	1270

ALISEA MCL		082A	102A	122A	152A	123A	133A	153A	134A	154A	126A
Cooling capacity	kW	40,9	50,6	62,5	77,5	90,4	99,1	116,2	135,1	155,5	170,3
Power input	kW	15,7	19,9	23,6	29,4	33	35,9	42,7	47,8	58,7	69,2
Scroll Compressors	n°	2	2	2	2	3	3	3	4	4	6
Refrigerant Circuits	n°	1	1	1	1	1	1	1	2	2	2
Capacity steps	%	2	2	2	2	3	3	3	4	4	6
Supply voltage	V/Ph/Hz	400/3/50									
Max current *	A	36	40,6	48,8	65,8	75,3	84	94,5	109,2	127,4	146,4
Current at start *	A	112,8	131,1	142,2	172,5	166,4	166,4	201,2	188,7	231,8	235,2
FAN SECTION											
Fans	n°	1	1	2	2	2	2	2	3	3	3
Total air flow	m³/h	17800	1680	35000	35000	33600	33600	33400	49600	47600	47600
Rotation speed	min-1	690	690	690	690	690	690	690	690	690	690
Power input (single fan)	kW	1,3	1,3	1,3	1,3	1,3	1,3	1,3	1,3	1,3	1,3
Current input (single fan)	A	2	2	2	2	2	2	2	2	2	2
NOISE DATA											
Sound power LwA	dB(A)	76,4	76,4	78,8	80	79,1	79,1	80,8	80,8	82,3	81,2
Sound pressure LpA (2)	dB(A)	44,7	44,7	546,9	48,2	47,2	47,2	48,9	48,7	50,3	49,1
SIZES AND WEIGHT											
Lenght	mm	1955	1955	3005	3005	3005	3005	3005	4255	4255	4255
Depth	mm	1123	1123	1123	1123	1123	1123	1123	1123	1123	1123
Height	mm	1954	1954	1954	1954	1954	1954	1954	1954	1954	1954
Indicative weight	Kg	545	570	687	709	795	797	850	1066	1089	1293

Operating conditions: ambient temp. 35 °C - condensing temp. +5°C D.P.
(2) Measured in free field condition at 10 m distance.

BWR

HIGH EFFICIENCY AIR COOLED FREECOOLING CHILLERS

Cc kW 13 ÷ 74,2

- **Indoor water cooler**
- **Easy installation and maintenance**
- **Available in a STD or High Pressure (HP) version**



PRODUCT FEATURES

Air cooled liquid chillers for indoor installation and radial fans.

6 models available with single-compressors, up to a capacity of 37 kW, and 4 models with twin-compressors up to a capacity of 74.2kW. All the units are fitted with Scroll compressors, dimensioned to use R407C refrigerant. Centrifugal fans designed to allow duct connection on suction and discharge air side.
The size of the BWR range has been calculated to satisfy installation requirements in residential or commercial buildings, paying particular attention to overall dimensions and noise level, while offering a range of accessories for facilitating installation and maintenance.
All the units are supplied fully wired and prepared for connection to the user system. Each appliance is tested for operation, including a check that all the installed safety devices are in proper working order, prior to delivery.
All models available with high pressure version HP.

ACCESORIES	
Refrigerants gauges	Antifreze evap. heating el.
Anti-vibration mount feet	Winter head pressure ctrl.
Top remote control	Compressor crankcase heater

TECHNICAL DRAWINGS

Mod.	a	b	c	d	e	f	g	h	i	l
13-1	395	341	1124	700	160	40	54	100	95	-
16-1	395	341	1124	700	160	40	54	100	95	-
22-1	471	404	1227	1222	331	21	55	67	75	-
26-1	471	404	1227	1222	331	21	55	67	75	-
32-1	471	404	1227	1222	331	21	55	67	75	-
151	557	478	1200	1710	516	49	144	103	166	-
092	471	404	1200	1710	199	104	144	103	166	362
102	471	404	1200	1710	199	104	144	103	166	362
122	471	404	1200	1710	199	104	144	103	166	362
152	557	478	1462	2360	203	29	63	100	169	424

BWR 13-16-22-26-32/1

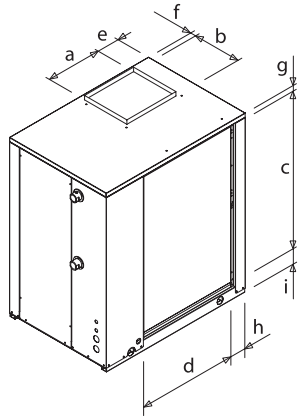

BWR 151-092-102-122

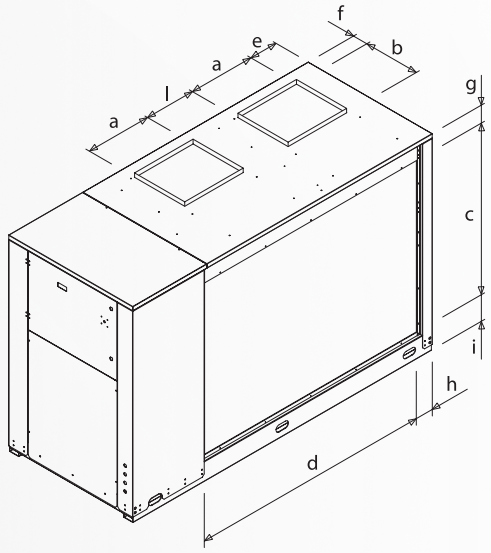

BWR 152

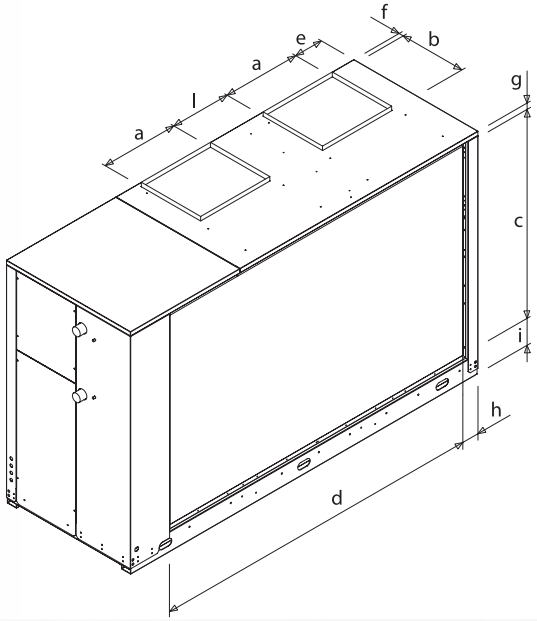

BWR

TECHNICAL DATA

BWR STD unit		13-1	16-1	22-1	26-1	32-1	151	092	102	122	152
Cooling capacity (1)	kW	13,0	15,4	22,3	27,0	33,0	37,0	43,0	50,5	62,5	74,2
Scroll Compressors	n°	1	1	1	1	1	1	2	2	2	2
Refrigerant Circuits	n°	1	1	1	1	1	1	1	1	1	1
Capacity steps	n°	1	1	1	1	1	1	2	2	2	2
Supply voltage	V/Ph/Hz	400/3/50									
Sound power LwA	dB(A)	79,2	83,7	82,4	88,2	90,4	88,7	85,2	85,7	87,8	91,3
Sound pressure LpA (2)	dB(A)	68,2	72,7	71,4	77,2	79,4	77,7	74,2	74,7	76,8	80,3
COMPRESSOR											
Power input	kW	4,2	5,5	7,3	8,5	11,2	12,9	7,3	8,5	11,2	12,9
Current input	A	8	10	14	21	23	26	14	21	23	26
Max current	A	11	15	20	29	32	35	20	29	32	35
Current at start	A	66	101	130	130	145	175	130	130	145	175
USER PLANT HEAT EXCHANGER											
Brazed plate exchanger	n°	1	1	1	1	1	1	1	1	1	1
Water flow	l/s	0,62	0,74	1,07	1,29	1,58	1,77	2,05	2,41	2,99	3,55
Pressure drops	kPa	23,4	32,8	24,7	36,2	40,5	48,3	30,3	41,8	35,2	33,7
FAN SECTION											
Fans	n°	1	1	1	1	1	1	2	2	2	2
Total air flow	m^3/h	5760	6984	10440	12996	14004	15984	19512	19692	21492	30996
External pressure	Pa	150	150	90	122	147	150	150	131	125	150
Rotation speed	min^{-1}	736	826	615	737	811	599	685	737	737	614
Unit power input	kW	1,1	1,5	1,5	3,0	4,0	3,0	2,2	2,2	2,2	3,0
Unit current input	A	2,7	3,6	3,6	6,4	8,6	6,4	4,9	4,9	4,9	6,4
TOTAL ELECTRIC ABSORPTION											
Power input	kW	5,3	7,0	8,8	11,5	15,2	15,9	19,1	21,4	26,8	31,7
Current input	A	10,5	13,6	17,9	27,1	31,5	31,9	38,4	51,2	55,6	63,8
Max current	A	13,7	18,6	23,6	35,4	40,6	41,4	49,8	67,8	73,8	82,8
Current at start	A	68	105	134	136	154	181	154	161	178	213
SIZES AND WEIGHT											
Lenght	mm	1120	1120	1460	1460	1460	2414	2414	2414	2414	2800
Depth	mm	780	780	780	780	780	1000	1000	1000	1000	1000
Height	mm	1280	1280	1387	1387	1387	1541	1541	1541	1541	1725
Weight	kg	228	234	349	360	381	594	709	746	802	943

(1) Operating conditions: plant exchangers water (inlet/outlet) 12/7°C; Ambient temp. 35°C.
Noise pressure according to ISO 3744.
(2) Sound pressure at 1 meter in free field.

* Consumptions refered to a single compressor.

TECHNICAL DATA

BWR HP unit		13-1	16-1	22-1	26-1	32-1	151	092	102	122	152
Cooling capacity (1)	kW	13,0	15,4	22,3	27,0	33,0	37,0	43,0	50,5	62,5	74,2
Scroll Compressors	n°	1	1	1	1	1	1	2	2	2	2
Refrigerant Circuits	n°	1	1	1	1	1	1	1	1	1	1
Capacity steps	n°	1	1	1	1	1	1	2	2	2	2
Supply voltage	V/Ph/Hz	400/3/50									
Sound power LwA	dB(A)	81,1	83,8	83,9	88,6	90,4	89,2	85,8	86,4	87,7	91,3
Sound pressure LpA (2)	dB(A)	70,1	72,8	72,9	77,6	79,4	78,2	74,8	75,4	76,7	80,3
COMPRESSOR											
Power input	kW	4,2	5,5	7,3	8,5	11,2	12,9	7,3	8,5	11,2	12,9
Current input	A	8	10	14	21	23	26	14	21	23	26
Max current	A	11	15	20	29	32	35	20	29	32	35
Current at start	A	66	101	130	130	145	175	130	130	145	175
USER PLANT HEAT EXCHANGER											
Brazed plate exchanger	n°	1	1	1	1	1	1	1	1	1	1
Water flow	l/s	0,62	0,74	1,07	1,29	1,58	1,77	2,05	2,41	2,99	3,55
Pressure drops	kPa	23,4	32,8	24,7	36,2	40,5	48,3	30,3	41,8	35,2	33,7
FAN SECTION											
Fans	n°	1	1	1	1	1	1	2	2	2	2
Total air flow	m^3/h	5760	6984	10440	12996	14004	15984	19512	19692	21492	30996
External pressure	Pa	301	291	286	292	287	294	267	296	287	246
Rotation speed	min^{-1}	736	826	615	737	811	599	685	737	737	614
Unit power input	kW	1,1	1,5	2,2	3,0	4,0	3,0	3,0	3,0	3,0	3,0
Unit current input	A	2,7	3,6	4,9	6,4	8,6	6,4	6,4	6,4	6,4	6,4
TOTAL ELECTRIC ABSORPTION											
Power input	kW	5,3	7,0	9,5	11,5	15,2	15,9	20,7	23,0	28,4	31,7
Current input	A	10,5	13,6	19,2	27,1	31,5	31,9	41,4	54,2	58,6	63,8
Max current	A	13,7	18,6	24,9	35,4	40,6	41,4	52,8	70,8	76,8	82,8
Current at start	A	68	105	135	136	154	181	157	164	181	213
SIZES AND WEIGHT											
Lenght	mm	1120	1120	1460	1460	1460	2414	2414	2414	2414	2800
Depth	mm	780	780	780	780	780	1000	1000	1000	1000	1000
Height	mm	1280	1280	1387	1387	1387	1541	1541	1541	1541	1725
Weight	kg	228	234	349	360	381	594	709	746	802	943

(1) Operating conditions: plant exchangers water (inlet/outlet) 12/7°C; Ambient temp. 35°C.
Noise pressure according to ISO 3744.
(2) Sound pressure at 1 meter in free field.

* Consumptions refered to a single compressor.

BWE

CONDENSERLESS CHILLER UNIT FOR INDOOR

Cc kW 4,6 ÷ 74,6

- **Compact dimensions**
- **Load-bearing and robust structure**
- **Available in a standard (STD) or storage tank and pump (AP) version**



PRODUCT FEATURES

Split air cooled chiller including a condenserless unit (BWE) for indoor and a remote condenser (CR).

The condenserless unit is assembled in a powder painted galvanised steel frame. Scroll compressors on all models. Plate to plate evaporator. Refrigerant circuit complete with filter drier, thermostatic expansion valve with externe equalisation and liquid/moisture indicator. Microprocessor regulation to control all the working parameters and active components in the circuit. The remote condenser is assembled in a galvanized steel supporting frame and it includes: condensing coil with copper pipes mechanically expanded into aluminium fins, axial an with rotating stator blades. Flare type refrigerant connections up to model 10-1, welding type connections on the other models.
BWE UNIT Available versions: AP: with water vessel and pump in a single package frame equipped with one off water pump, water vessel, expansion vessel, safety valve and flow switch.
ALL UNITS ARE SUPPLIED WITHOUT REFRIGERANT CHARGE.
CR available versions:
• CRS standard noise version
• CRL Low noise version.

ACCESORIES	
Refrigerants gauges	Liquid receiver
Anti-vibration mount feet	Compressor crankcase heater
Top remote control	

TECHNICAL DATA

BWE		05-1	06-1	08-1	10-1	13-1	16-1	22-1	26-1	32-1	151	092	102	122	152
Cooling capacity (1)	kW	4,6	5,6	8,5	9,8	12,5	16,7	22,0	25,5	31,8	37,2	44,2	51,4	63,8	74,6
Cond. heat. rejection (2)	kW	6,1	7,5	11,1	12,9	16,3	21,7	28,6	33,2	41,9	48,8	57,4	66,7	83,9	97,6
Scroll Compressors	n°	1	1	1	1	1	1	1	1	1	1	2	2	2	2
Refrigerant Circuits	n°	1	1	1	1	1	1	1	1	1	1	1	1	1	1
Capacity steps	n°	1	1	1	1	1	1	1	1	1	1	2	2	2	2
Power supply voltage	V/Ph/Hz	230/1/50			400/3/50										
COMPRESSOR *															
Power input *	kW	1,6	2,1	2,9	3,4	4,2	5,5	7,3	8,5	11,2	12,9	7,3	8,5	11,2	12,9
Current input *	A	8	9	13	16	8	10	14	21	23	26	14	21	23	26
Max current *	A	11	15	23	24	11	15	20	29	32	35	20	29	32	35
Current at start *	A	47	61	100	114	66	101	130	130	145	175	130	130	145	175
USER PLANT HEAT EXCHANGER															
Brazed plate heat exch.	n°	1	1	1	1	1	1	1	1	1	1	1	1	1	1
Water flow	l/s	0,22	0,22	0,27	0,41	0,47	0,60	0,80	1,05	1,52	1,78	2,11	2,46	3,05	3,56
Pressure drops	kPa	4,7	4,7	7,5	17,4	13,3	21,6	13,8	24,0	37,6	22,7	32,0	23,8	36,7	34,1
TOTAL ELECTRIC ABSORPTION															
Power input	kW	1,6	2,1	2,9	3,4	4,2	5,5	7,3	8,5	11,2	12,9	14,7	17,0	22,4	25,7
Current input	A	7,7	9,4	13,1	16,4	7,8	10,0	14,3	20,7	22,9	25,5	28,6	41,4	45,8	51,0
Max current	A	11,4	14,8	23,1	23,5	11,0	15,0	20,0	29,0	32,0	35,0	40,0	58,0	64,0	70,0
Current at start	A	47	61	100	114	66	101	130	130	145	175	144	151	168	201
SIZES AND WEIGHT															
Lenght	mm	370	370	410	410	600	600	600	600	600	600	1300	1300	1300	1300
Depth	mm	450	450	450	450	570	570	570	570	570	570	680	680	680	680
Height	mm	860	860	1112	1113	1220	1220	1220	1220	1220	1366	1220	1220	1220	1220
Weight	kg	66	69	82	91	110	124	175	181	192	285	335	343	353	401
Lenght AP	mm	660	660	660	660	1000	1000	1000	1000	1000	ND	ND	ND	ND	ND
Depth AP	mm	450	450	450	450	570	570	570	570	570	ND	ND	ND	ND	ND
Height AP	mm	1112	1112	1112	1112	1220	1220	1220	1220	1220	ND	ND	ND	ND	ND
Weight AP	kg	110	114	123	134	170	185	241	247	258	ND	ND	ND	ND	ND
WATER TANK AND PUMP UNIT VERSION															
Contenence	l	30	30	30	30	70	70	70	70	70	–	–	–	–	–
External pressure	kPa	30	37	44	26	197	182	170	136	90	–	–	–	–	–
Power input	kW	4,0	1,5	1,5	2,2	0,4	0,4	0,4	0,4	0,4	–	–	–	–	–
Current input	A	9,6	4,3	4,3	5,3	3,0	3,0	1,4	1,4	1,4	–	–	–	–	–

(1) Operating conditions: plant exchangers water (inlet/outlet) 12/7°C; Ambient temp. 35°C, 50% R.H.
(2) Operating conditions: plant exchangers water (inlet/outlet) 23/18°C; Ambient temp. 35°C .
* Consumptions refered to a single compressor.

BWE

TECHNICAL DRAWINGS

BWE/STD

BWE /STD 05-06-08-10/1

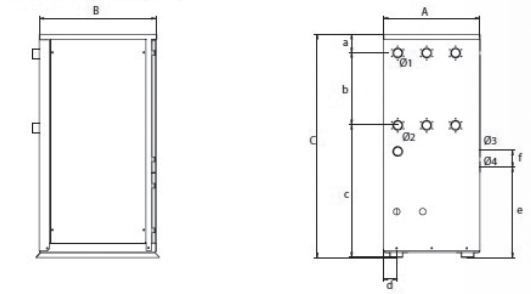

BWE /STD 13-16-22-26-32/1-151

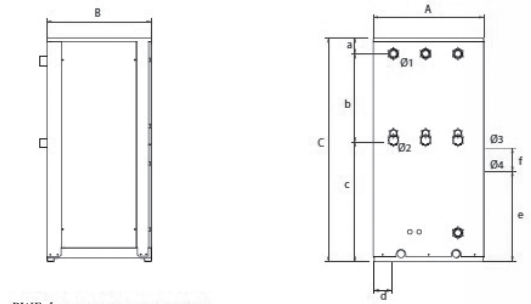

BWE /STD 092-102-122-152

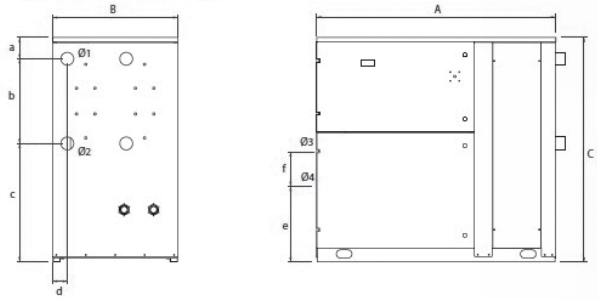

	A	B	C	a	b	c	d	e	f	Ø1	Ø2	Ø3	Ø4
05-1	370	450	860	73	316	471	33	400	100	¾" F	¾" F	½" sae flare*12mm	$^{3}/_{8}$" sae flare*10mm
06-1	370	450	860	73	316	471	33	400	100	¾" F	¾" F	½" sae flare*12mm	$^{3}/_{8}$" sae flare*10mm
08-1	410	450	1112	85	345	682	38	400	100	¾" F	¾" F	½" sae flare*12mm	$^{3}/_{8}$" sae flare*10mm
10-1	410	450	1112	85	345	682	38	400	100	¾" F	¾" F	½" sae flare*12mm	$^{3}/_{8}$" sae flare*10mm
13-1	600	570	1220	85	345	682	108	400	100	1 ¼" F	1 ¼" F	16	12
16-1	600	570	1220	85	345	682	108	400	100	1 ¼" F	1 ¼" F	16	12
22-1	600	570	1220	85	345	682	108	400	100	1 ¼" F	1 ¼" F	22	16
26-1	600	570	1220	85	345	682	108	400	100	1 ¼" F	1 ¼" F	22	16
32-1	600	570	1220	85	345	682	108	400	100	1 ¼" F	1 ¼" F	22	16
151	600	570	1365	85	442	838	80	543	100	2" M	2" M	35	22
092	1300	680	1220	90	442	688	80	543	100	2" M	2" M	35	22
102	1300	680	1220	120	442	658	80	543	100	2" M	2" M	35	22
122	1300	680	1220	120	442	658	80	543	100	2" M	2" M	35	22
152	1300	680	1220	120	442	658	80	543	100	2" M	2" M	42	22

Ø1 = System water inlet
Ø2 = System water outlet
Ø3-Ø4 = Refrigerant connections

BWE/AP

BWE /AP 05-06-08-10/1

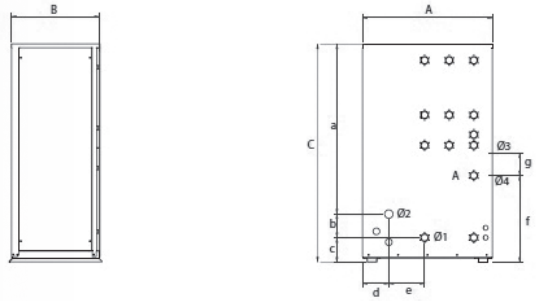

BWE /AP 13-16-22-26-32/1

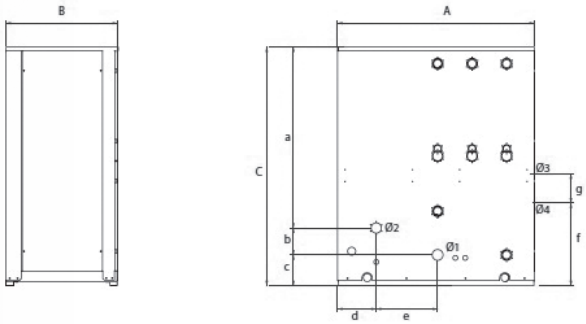

	A	B	C	a	b	c	d	e	f	g	Ø1	Ø2	Ø3	Ø4
05-1	660	450	1112	867	120	125	133	400	400	100	¾" F	¾" F	½" sae flare*12mm	$^{3}/_{8}$" sae flare*10mm
06-1	660	450	1112	867	120	125	133	400	400	100	¾" F	¾" F	½" sae flare*12mm	$^{3}/_{8}$" sae flare*10mm
08-1	660	450	1112	867	120	125	133	400	400	100	¾" F	¾" F	½" sae flare*12mm	$^{3}/_{8}$" sae flare*10mm
10-1	660	450	1112	867	120	125	133	400	400	100	¾" F	¾" F	½" sae flare*12mm	$^{3}/_{8}$" sae flare*10mm
13-1	1000	570	1220	927	137	156	196	400	400	100	1 ¼" F	2 ¼" F	16	12
16-1	1000	570	1220	927	137	156	196	400	400	100	1 ¼" F	2 ¼" F	16	12
22-1	1000	570	1220	927	137	156	196	400	400	100	1 ¼" F	2 ¼" F	22	16
26-1	1000	570	1220	927	137	156	196	400	400	100	1 ¼" F	2 ¼" F	22	16
32-1	1000	570	1220	927	137	156	196	400	400	100	1 ¼" F	2 ¼" F	22	16

Ø1 = System water inlet
Ø2 = System water outlet
Ø3-Ø4 = Refrigerant connections

NOTES



WATER COOLED CHILLERS AND HEAT PUMPS

RIVIERA PAGE 74

RIVIERA T/O PAGE 78

RIVIERA-H HE PAGE 82

RIVIERA

WATER COOLED CHILLERS

Cc kW 5,2 ÷ 86,4

- **Compact dimensions**
- **Load-bearing and robust structure**
- **Optional hydronic kit included**
- **Low noise level**

MADE IN ITALY



PRODUCT FEATURES

Built-in units assembled in a powder painted galvanized steel frame. Scrool compressors on all the models, plate to plate evaporators and condensers. Refrigeration circuit complete with filter drier, liquid/moisture indicator, thermostatic expansion valve with externe equalisation.
Microprocessor regulation to control all the working parameters and active components in the circuit. Mains isolator as standard.

Available versions:
AP: with water vessel and pump in a single package frame equipped with one off water pump, water vessel, expansion vessel, safety valve and flow switch.
Units with 2 compressors are available on the versions with single or twin refrigerant circuits.

Available accessories:
PRG-BRC TOP-RPV-AVF-CRH

WELL WATER ACCESSORIES	
Refrigerants gauges	Crankcase heater
Top remote control	Head press. ctrl water walve
Anti-vibration mount feet	

TECHNICAL DATA

		05-1	06-1	09-1	11-1	14-1	19-1	25-1	29-1	36-1	151	092	102	122	152
Cooling capacity	kW	5,2	6,3	9,2	11,3	14,0	18,8	24,9	28,8	36,0	43,2	50,5	58,1	72,2	86,4
Scroll Compressors	n°	1	1	1	1	1	1	1	1	1	1	2	2	2	2
Refrigerant Circuits	n°	1	1	1	1	1	1	1	1	1	1	1	1	1	1
Capacity steps	n°	1	1	1	1	1	1	1	1	1	1	2	2	2	2
Supply voltage	V/Ph/Hz	230/1/50			400/3/50										
Sound power LwA	dB(A)	63,4	63,4	67,9	66,7	67,3	70,3	73,1	75,3	75,8	79,7	76,1	78,3	78,8	82,7
Sound pressure LpA *	dB(A)	52,4	52,4	56,9	55,7	56,3	59,3	62,1	64,3	64,8	68,7	65,1	67,3	67,8	71,7
COMPRESSOR															
Power input (*)	kW	1,1	1,5	2,0	2,4	3,0	3,9	5,2	5,9	8,0	9,1	5,2	5,9	8,0	9,1
Current input (*)	A	8	9	13	16	8	10	14	21	23	19	11	13	16	19
Max current (*)	A	11	15	23	24	11	15	20	29	32	35	20	29	32	35
Current at start (*)	A	47	61	100	114	66	101	130	130	145	175	130	130	145	175
USER PLANT SIDE															
Brazed plate exchanger	n°	1	1	1	1	1	1	1	1	1	1	1	1	1	1
Water flow	l/s	0,25	0,30	0,44	0,54	0,67	0,90	1,19	1,38	1,72	2,06	2,41	2,78	3,45	4,13
Pressure drops	kPa	6,0	8,9	20,3	30,7	27,1	17,5	30,8	30,9	45,7	30,6	41,8	30,4	47,0	45,7
EXTERNAL SOURCE															
Brazed plate exchanger	n°	1	1	1	1	1	1	1	1	1	1	1	1	1	1
Water flow	l/s	0,099	0,121	0,176	0,214	0,266	0,355	0,471	0,544	0,687	0,82	0,95	1,10	1,38	1,64
Pressure drops	kPa	1,0	1,4	3,3	4,8	7,4	13,2	23,3	31,1	28,6	4,8	6,5	4,7	7,5	7,2
TOTAL ELECTRIC ABSORPTION															
Power input	kW	1,1	1,5	2,0	2,4	3,0	3,9	5,2	5,9	8,0	9,1	10,4	11,9	15,9	18,2
Current input	A	7,7	9,4	13,1	16,4	7,8	10,0	14,3	20,7	22,9	18,9	22,6	26,2	31,6	37,8
Max current	A	11,4	14,8	23,1	23,5	11,0	15,0	20,0	29,0	32,0	35,0	40,0	58,0	64,0	70,0
Current at start	A	47	61	100	114	66	101	130	130	145	175	141	143	161	194
SIZES AND WEIGHT															
Lenght	mm	370	370	410	410	600	600	600	600	600	600	1300	1300	1300	1300
Depth	mm	450	450	450	450	570	570	570	570	570	1375	680	680	680	680
Height	mm	860	860	1112	1112	1220	1220	1220	1220	1220	570	1220	1220	1220	1220
Weight	kg	69	73	85	95	114	129	180	185	202	270	365	372	398	432
AP Lenght	mm	660	660	660	660	1000	1000	1000	1000	1000	-	-	-	-	-
AP Depth	mm	450	450	450	450	570	570	570	570	570	-	-	-	-	-
AP Height	mm	1112	1112	1112	1112	1220	1220	1220	1220	1220	-	-	-	-	-
AP Weight	kg	115	118	129	136	181	196	248	253	268	-	-	-	-	-
VERSION WITH WATER VESSEL AND PUMP															
Contenence	l	30	30	30	30	70	70	70	70	70	-	-	-	-	-
Pump externe pressure	kPa	33	23	67	63	161	161	129	114	88	-	-	-	-	-
Pump power input	kW	0,2	0,2	0,9	0,9	0,4	0,4	0,4	0,4	0,4	-	-	-	-	-
Pump current input	A	0,4	0,4	1,0	1,0	3,0	3,0	1,4	1,4	1,4	-	-	-	-	-
EXPANSION VESSEL															
Volume	l	6,0	6,0	6,0	6,0	6,0	6,0	6,0	6,0	6,0	-	-	-	-	-
Max. water pressure	kPa	300	300	300	300	300	300	300	300	300	-	-	-	-	-
Nitrogen pre-charge pressure	kPa	150	150	150	150	150	150	150	150	150	-	-	-	-	-
Quantity	n°	1	1	1	1	1	1	1	1	1	-	-	-	-	-

COOLING CAPACITY:
Water temp (in/out) 12/7°C
Well water (inlet/outlet) 15/30 °C
* Sound pressure at 1 meters in free field
Noise pressure according to ISO 3744

RIVIERA

TECHNICAL DRAWINGS

RIVIERA/STD 05-06/1

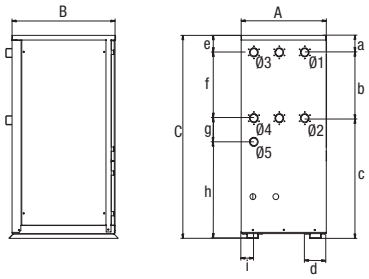

RIVIERA/STD 09-11/1

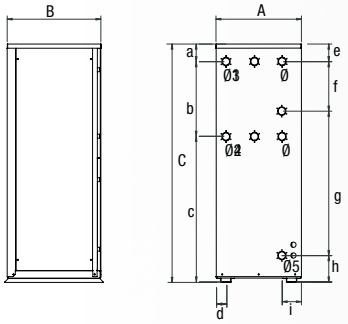

RIVIERA/STD 14-19-25-29-36-151/1

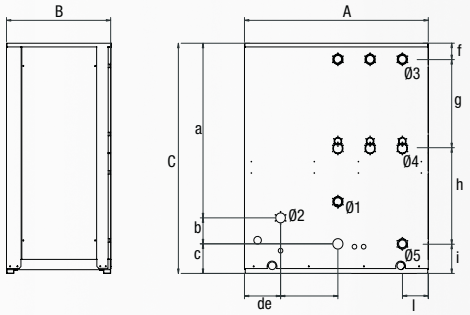

RIVIERA/STD 092-102-122-152

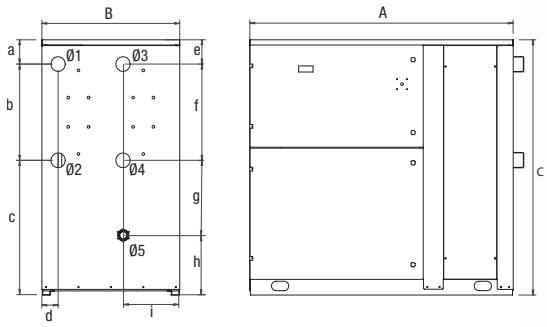

RIVIERA/AP 05-06/1

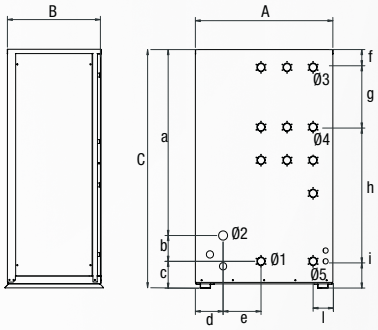

RIVIERA/AP 09-11/1

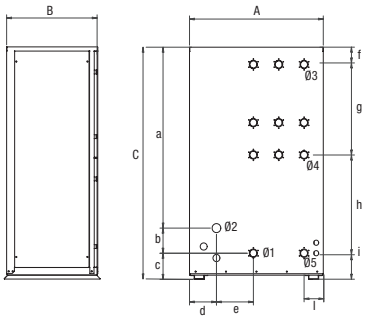

RIVIERA/AP 14-19-25-29-36/1

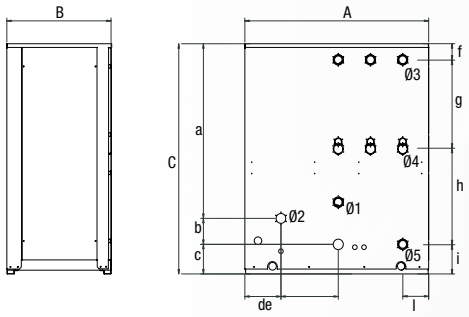

SYMBOLS LEGEND
Ø1 = plant exchanger inlet water
Ø2 = plant exchanger outlet water
Ø3 = well water inlet
Ø4 = well water outlet
Ø5 = not available

TECHNICAL DRAWINGS

RIVIERA/STD

	A	B	C	a	b	c	d	e	f	g	h	i	Ø1	Ø2	Ø3	Ø4	Ø5
05-1	370	450	860	72	278	509	94	72	278	100	409	55	¾" F	¾" F	¾" F	¾" F	¾" F
06-1	370	450	860	72	278	509	94	72	278	100	409	55	¾" F	¾" F	¾" F	¾" F	¾" F
09-1	410	450	1112	83	433	596	65	83	278	626	125	95	¾" F	¾" F	¾" F	¾" F	¾" F
11-1	410	450	1112	83	433	596	65	83	278	626	125	95	¾" F	¾" F	¾" F	¾" F	¾" F
14-1	600	570	1220	83	433	596	65	83	278	626	125	95	1 ¼" F	1 ¼" F	¾" F	¾" F	¾" F
19-1	600	570	1220	83	433	596	65	83	278	626	125	95	1 ¼" F	1 ¼" F	¾" F	¾" F	¾" F
25-1	600	570	1220	83	433	596	65	83	278	626	125	95	1 ¼" F	1 ¼" F	¾" F	¾" F	¾" F
29-1	600	570	1220	83	433	596	65	83	278	626	125	95	1 ¼" F	1 ¼" F	¾" F	¾" F	¾" F
36-1	600	570	1220	83	433	596	65	83	278	626	125	95	1 ¼" F	1 ¼" F	1 ¼" F	1 ¼" F	1 ¼" F
151	600	570	1365	65	442	838	80	85	442	714	284	240	2" M	2" M	2" M	2" M	1 ¼" F
092	1300	680	1220	116	460	624	80	116	460	360	284	280	2" M	2" M	2" M	2" M	1 ¼" F
102	1300	680	1220	116	460	624	80	116	460	360	284	280	2" M	2" M	2" M	2" M	1 ¼" F
122	1300	680	1220	116	460	624	80	116	460	360	284	280	2" M	2" M	2" M	2" M	1 ¼" F
152	1300	680	1220	116	460	624	80	116	460	360	284	280	2" M	2" M	2" M	2" M	1 ¼" F

RIVIERA/AP

	A	B	C	a	b	c	d	e	f	g	h	i	l	Ø1	Ø2	Ø3	Ø4	Ø5
05-1	660	450	1112	867	120	125	133	182	84	278	625	125	95	¾" F	¾" F	¾" F	¾" F	¾" F
06-1	660	450	1112	867	120	125	133	182	84	278	625	125	95	¾" F	¾" F	¾" F	¾" F	¾" F
09-1	660	450	1112	867	120	125	133	182	84	278	625	125	95	¾" F	¾" F	¾" F	¾" F	¾" F
11-1	660	450	1112	867	120	125	133	182	84	278	625	125	95	¾" F	¾" F	¾" F	¾" F	¾" F
14-1	1000	570	1220	927	137	156	196	312	85	432	541	156	141	1 ¼" F	1 ¼" F	¾" F	¾" F	¾" F
19-1	1000	570	1220	927	137	156	196	312	85	432	541	156	141	1 ¼" F	1 ¼" F	¾" F	¾" F	¾" F
25-1	1000	570	1220	927	137	156	196	312	85	432	541	156	141	1 ¼" F	1 ¼" F	¾" F	¾" F	¾" F
29-1	1000	570	1220	927	137	156	196	312	85	432	541	156	141	1 ¼" F	1 ¼" F	¾" F	¾" F	¾" F
36-1	1000	570	1220	927	137	156	196	312	85	432	541	156	141	1 ¼" F	1 ¼" F	1 ¼" F	1 ¼" F	1 ¼" F

RIVIERA/TO

WATER COOLED CHILLERS FOR TOWER WATER

Cc kW 5,2 ÷ 86,4

- **Compact dimensions**
- **Load-bearing and robust structure**
- **Optional hydronic kit included**
- **Low noise level**

MADE IN ITALY



PRODUCT FEATURES

Built-in units assembled in a powder painted galvanized steel frame. Scrool compressors on all the models, plate to plate evaporators and condensers.
Refrigeration circuit complete with filter drier, liquid/moisture indicator, thermostatic expansion valve with externe equalisation.
Microprocessor regulation to control all the working parameters and active components in the circuit. Mains isolator as standard.

Available versions:
AP: with water vessel and pump in a single package frame equipped with one off water pump, water vessel, expansion vessel, safety valve and flow switch.
Units with 2 compressors are available on the versions with single or twin refrigerant circuits.

Available accessories:
PRG-BRC TOP-AVF-CRH

Tower water accessories	
Refrigerants gauges	Anti-vibration mount feet
Top remote control	Crankcase heater

TECHNICAL DATA

		05-1	06-1	09-1	11-1	14-1	19-1	25-1	29-1	36-1	151	092	102	122	152
Cooling capacity (tower) (1)	kW	5,0	6,1	8,9	10,9	13,5	18,4	24,0	27,5	34,5	40,8	48,0	55,0	66,7	81,6
Cooling capacity (dry-cooler) (2)	kW	4,5	5,7	8,1	9,8	12,1	16,2	21,5	24,9	31,1	36,8	43,8	50,7	62,8	75,2
Scroll Compressors	n°	1	1	1	1	1	1	1	1	1	1	2	2	2	2
Refrigerant Circuits	n°	1	1	1	1	1	1	1	1	1	1	1	1	1	1
Capacity steps	n°	1	1	1	1	1	1	1	1	1	1	1	1	1	1
Supply voltage	V/Ph/Hz	230/1/50			400/3/50										
Sound power LwA (3)	dB(A)	63,4	63,4	67,9	66,7	67,3	70,3	73,1	75,3	75,8	79,7	76,1	78,3	78,8	82,7
Sound pressure LpA (4)	dB(A)	52,4	52,4	56,9	55,7	56,3	59,3	62,1	64,3	64,8	68,7	65,1	67,3	67,8	71,7
COMPRESSOR															
Power input (torre) (*)	kW	1,3	1,7	2,3	2,7	3,3	4,3	5,8	6,7	8,9	10,3	6,0	6,9	9,1	10,3
Power input (dry cooler) (*)	kW	1,6	2,1	2,9	3,4	4,2	5,5	7,3	8,5	11,2	12,9	7,3	8,5	11,2	12,9
Current input (*)	A	8	9	13	16	8	10	14	21	23	19	11	13	16	19
Max current (*)	A	11	15	23	24	11	15	20	29	32	35	20	29	32	35
Current at start (*)	A	47	61	100	114	66	101	130	130	145	175	130	130	145	175
USER PLANT SIDE															
Brazed plate exchanger	n°	1	1	1	1	1	1	1	1	1	1	1	1	1	1
Water flow	l/s	0,24	0,29	0,43	0,52	0,65	0,88	1,15	1,31	1,65	1,95	2,29	2,63	3,19	3,90
Pressure drops	kPa	5,6	8,3	19,0	28,5	25,2	16,8	28,6	28,1	42,0	27,3	37,8	27,3	40,1	40,8
EXTERNAL SOURCE															
Brazed plate exchanger	n°	1	1	1	1	1	1	1	1	1	1	1	1	1	1
Water flow	l/s	0,24	0,29	0,43	0,52	0,65	0,88	1,15	1,31	1,65	1,95	2,29	2,63	3,19	3,90
Pressure drops	kPa	5,6	8,3	19,0	28,5	25,2	16,8	28,6	28,1	42,0	27,3	37,8	27,3	40,1	40,8
TOTAL ELECTRIC ABSORPTION															
Power input (tower) (*)	kW	1,3	1,7	2,3	2,7	3,3	4,3	5,8	6,7	8,9	10,3	11,9	13,7	18,1	20,7
Power input (dry cooler) (*)	kW	1,6	2,1	2,9	3,4	4,2	5,5	7,3	8,5	11,2	12,9	14,7	17,0	22,4	25,7
Current input	A	7,7	9,4	13,1	16,4	7,8	10,0	14,3	20,7	22,9	18,9	22,6	26,2	31,6	37,8
Max current	A	11,4	14,8	23,1	23,5	11,0	15,0	20,0	29,0	32,0	35,0	40,0	58,0	64,0	70,0
Current at start	A	47	61	100	114	66	101	130	130	145	175	141	143	161	194
SIZES AND WEIGHT															
Lenght	mm	370	370	410	410	600	600	600	600	600	600	1300	1300	1300	1300
Depth	mm	450	450	450	450	570	570	570	570	570	570	680	680	680	680
Height	mm	860	860	1112	1112	1220	1220	1220	1220	1220	1375	1220	1220	1220	1220
Weight	kg	69	73	85	95	114	129	180	185	202	270	365	505	372	398
AP Lenght	mm	660	660	660	660	1000	1000	1000	1000	1000	-	-	-	-	-
AP Depth	mm	450	450	450	450	570	570	570	570	570	-	-	-	-	-
AP Height	mm	1112	1112	1112	1112	1220	1220	1220	1220	1220	-	-	-	-	-
AP Weight	kg	115	118	129	136	181	196	248	253	268	-	-	-	-	-
VERSION WITH WATER VESSEL AND PUMP															
Contenence	l	30	30	30	30	70	70	70	70	70	-	-	-	-	-
Pump externe pressure	kPa	34	23	67	63	161	161	129	114	88	-	-	-	-	-
Pump power input	kW	0,2	0,2	0,9	0,9	0,4	0,4	0,4	0,4	0,4	-	-	-	-	-
Pump current input	A	0,4	0,4	1,0	1,0	3,0	3,0	1,4	1,4	1,4	-	-	-	-	-
EXPANSION VESSEL															
Volume	l	6,0	6,0	6,0	6,0	6,0	6,0	6,0	6,0	6,0	-	-	-	-	-
Max. water pressure	kPa	300	300	300	300	300	300	300	300	300	-	-	-	-	-
Nitrogen pre-charge pressure	kPa	150	150	150	150	150	150	150	150	150	-	-	-	-	-
Quantity	n°	1	1	1	1	1	1	1	1	1	-	-	-	-	-

(1) TOWER WATER REFRIGERATING CAPACITY::
Water temp (in/out) 12/7°C; external source (inlet/outlet) 29/35°C
(2) COOLING OPERATING CONDITIONS:
plant excengers water (inlet/outlet) 12/7°C; external source (inlet/outlet) 39/45°C
(3) Noise pressure according to ISO 3744
(4) Sound pressure at 1 meters in free field
***Consumptions refered to a single compressor**

RIVIERA/TO

TECHNICAL DRAWINGS

RIVIERA/STD 05-06/1

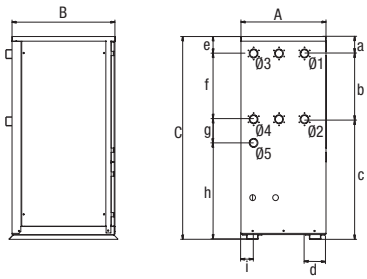

RIVIERA/STD 09-11/1

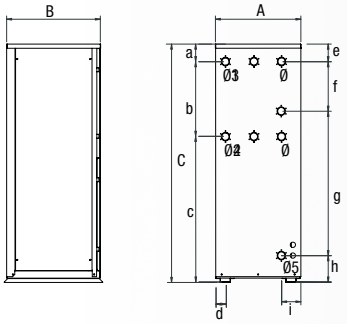

RIVIERA/STD 14-19-25-29-36-151/1

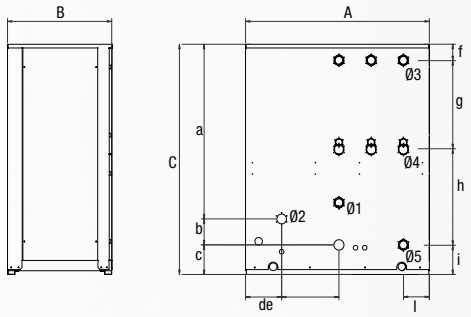

RIVIERA/STD 092-102-122-152

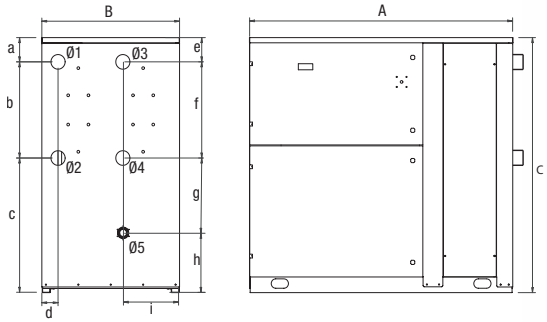

RIVIERA/AP 05-06/1

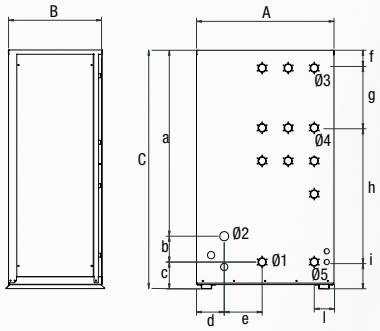

RIVIERA/AP 09-11/1

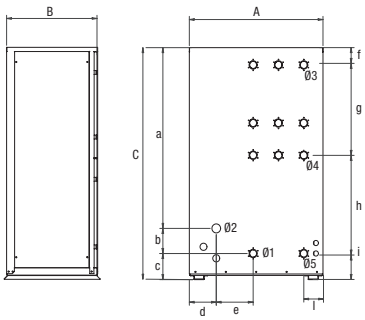

RIVIERA/AP 14-19-25-29-36/1

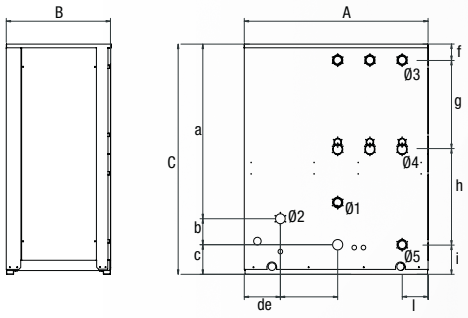

SYMBOLS LEGEND
Ø1 = plant exchanger inlet water
Ø2 = plant exchanger outlet water
Ø3 = well water inlet
Ø4 = well water outlet
Ø5 = not available

TECHNICAL DRAWINGS

RIVIERA/STD

	A	B	C	a	b	c	d	e	f	g	h	i	Ø1	Ø2	Ø3	Ø4	Ø5
05-1	370	450	860	72	278	509	94	72	278	100	409	55	¾" F	¾" F	¾" F	¾" F	¾" F
06-1	370	450	860	72	278	509	94	72	278	100	409	55	¾" F	¾" F	¾" F	¾" F	¾" F
09-1	410	450	1112	83	433	596	65	83	278	626	125	95	¾" F	¾" F	¾" F	¾" F	¾" F
11-1	410	450	1112	83	433	596	65	83	278	626	125	95	¾" F	¾" F	¾" F	¾" F	¾" F
14-1	600	570	1220	83	433	596	65	83	278	626	125	95	1 ¼" F	1 ¼" F	¾" F	¾" F	¾" F
19-1	600	570	1220	83	433	596	65	83	278	626	125	95	1 ¼" F	1 ¼" F	¾" F	¾" F	¾" F
25-1	600	570	1220	83	433	596	65	83	278	626	125	95	1 ¼" F	1 ¼" F	¾" F	¾" F	¾" F
29-1	600	570	1220	83	433	596	65	83	278	626	125	95	1 ¼" F	1 ¼" F	¾" F	¾" F	¾" F
36-1	600	570	1220	83	433	596	65	83	278	626	125	95	1 ¼" F	1 ¼" F	1 ¼" F	1 ¼" F	1 ¼" F
151	600	570	1365	65	442	838	80	85	442	714	284	240	2" M	2" M	2" M	2" M	1 ¼" F
092	1300	680	1220	116	460	624	80	116	460	360	284	280	2" M	2" M	2" M	2" M	1 ¼" F
102	1300	680	1220	116	460	624	80	116	460	360	284	280	2" M	2" M	2" M	2" M	1 ¼" F
122	1300	680	1220	116	460	624	80	116	460	360	284	280	2" M	2" M	2" M	2" M	1 ¼" F
152	1300	680	1220	116	460	624	80	116	460	360	284	280	2" M	2" M	2" M	2" M	1 ¼" F

RIVIERA/AP

	A	B	C	a	b	c	d	e	f	g	h	i	l	Ø1	Ø2	Ø3	Ø4	Ø5
05-1	660	450	1112	867	120	125	133	182	84	278	625	125	95	¾" F	¾" F	¾" F	¾" F	¾" F
06-1	660	450	1112	867	120	125	133	182	84	278	625	125	95	¾" F	¾" F	¾" F	¾" F	¾" F
09-1	660	450	1112	867	120	125	133	182	84	278	625	125	95	¾" F	¾" F	¾" F	¾" F	¾" F
11-1	660	450	1112	867	120	125	133	182	84	278	625	125	95	¾" F	¾" F	¾" F	¾" F	¾" F
14-1	1000	570	1220	927	137	156	196	312	85	432	541	156	141	1 ¼" F	1 ¼" F	¾" F	¾" F	¾" F
19-1	1000	570	1220	927	137	156	196	312	85	432	541	156	141	1 ¼" F	1 ¼" F	¾" F	¾" F	¾" F
25-1	1000	570	1220	927	137	156	196	312	85	432	541	156	141	1 ¼" F	1 ¼" F	¾" F	¾" F	¾" F
29-1	1000	570	1220	927	137	156	196	312	85	432	541	156	141	1 ¼" F	1 ¼" F	¾" F	¾" F	¾" F
36-1	1000	570	1220	927	137	156	196	312	85	432	541	156	141	1 ¼" F	1 ¼" F	1 ¼" F	1 ¼" F	1 ¼" F

RIVIERA-H HE

WATER COOLED HEATING ONLY HEAT PUMP

Hc kW 6,7 ÷ 107,7

- **Compact dimensions**
- **Load-bearing and robust structure**
- **Optional hydronic kit included**
- **Low noise level**

MADE IN ITALY



PRODUCT FEATURES

Well water heat pump, only for heating, for indoor

RIVIERA-H (standard):
Single unit mounted on powder painted galvanised steel bearing structures. Scroll compressor with crankcase resistance, brazed plate evaporator and condenser. The cooling circuit has a dehydration filter and liquid/humidity indicator. Microprocessor regulation control all the working parameters and active components in the circuit. General isolation switch with door blocking device.

RIVIERA-H/AP (with storage tank and pump):
Fitted like the basic version, but with 1 circulation unit or axial pump fitted, water storage tank, expansion tank, safety valve, flow switch.

ACCESSORIES	
Refrigerants gauges	Crankcase heater di serie
Top remote control	Amb. temp. Sensor (Dyn. set point)
Anti-vibration mount feet	

RIVIERA-H HE

TECHNICAL DATA

		05-1	06-1	09-1	11-1	14-1	19-1	25-1	29-1	36-1	151	092	102	122	152
Energetic class		A++	A++	A++	A++	A++	A++	A++	A++	A++	A++	A++	A++	A++	A++
Heating capacity	kW	6,7	8,5	11,9	14,3	17,8	23,7	31,3	36,3	47,7	53,8	62,7	72,6	94,1	107,7
COP (2)	-	5,1	5,1	5,1	5,2	5,2	5,3	5,2	5,3	5,2	5,2	5,7	5,3	5,2	5,2
Scroll Compressors	n°	1	1	1	1	1	1	1	1	1	1	2	2	2	2
Refrigerant Circuits	n°	1	1	1	1	1	1	1	1	1	1	1	1	1	1
Capacity steps	n°	1	1	1	1	1	1	1	1	1	1	2	2	2	2
Supply voltage	V/Ph/Hz	230/1/50			400/3/50										
Sound power LwA (3)	dB(A)	63,4	63,4	67,9	66,7	67,3	70,3	73,1	75,3	75,8	79,7	76,1	78,3	78,8	82,7
Sound pressure LpA (4)	dB(A)	52,4	52,4	56,9	55,7	56,3	59,3	62,1	64,3	64,8	68,7	65,1	67,3	67,8	71,7
COMPRESSOR															
Power input (*)	kW	1,2	1,5	2,1	2,4	3,0	3,9	5,3	6,1	8,1	9,3	5,3	6,1	8,1	9,3
Current input (*)	A	6	7	10	13	7	9	11	13	16	19	11	13	16	19
Max current (*)	CA	11	15	23	24	11	15	20	29	32	35	20	29	32	35
Current at start (*)	A	47	61	100	114	66	101	130	130	145	175	130	130	145	175
USER PLANT SIDE															
Brazed plate exchanger	n°	1	1	1	1	1	1	1	1	1	1	1	1	1	1
Water flow	l/s	0,24	0,32	0,44	0,54	0,66	0,88	1,19	1,38	1,81	2,07	2,38	2,77	3,62	4,11
Pressure drops	kPa	3,6	6,1	4,0	5,9	5,5	9,8	8,8	11,9	15,8	7,4	9,8	10,9	11,5	10,6
EXTERNAL SOURCE															
Brazed plate exchanger	n°	1	1	1	1	1	1	1	1	1	1	1	1	1	1
Water flow	l/s	0,098	0,126	0,176	0,213	0,263	0,350	0,471	0,546	0,718	0,820	0,942	1,093	1,434	1,63
Pressure drops	kPa	0,6	1,0	0,6	0,9	0,9	1,5	1,4	1,9	2,5	1,2	1,5	1,7	1,8	1,7
Water flow in winter	l/s	0,26	0,33	0,46	0,56	0,69	0,93	1,04	1,26	1,45	1,78	2,38	2,76	3,67	4,19
Pressure drops	kPa	4	6,6	4,4	6,5	6,1	10,9	6,8	9,9	10,2	5,5	9,8	10,8	11,9	11
TOTAL ELECTRIC ABSORPTION															
Power input in summer (1)	kW	1,14	1,47	2,05	2,40	2,98	3,87	5,21	5,96	7,96	9,09	10,41	11,92	15,93	18,18
Current input in summer (1)	A	5,8	7,0	9,8	12,6	6,7	8,5	11,3	13,1	15,8	18,6	22,6	26,2	31,7	37,2
Power input in winter (2)	kW	1,31	1,68	2,34	2,75	3,44	4,48	5,97	6,85	9,12	10,40	11,93	13,70	18,24	20,81
Current input in winter (2)	A	6,6	7,9	11,0	14,1	7,1	9,1	12,1	14,0	17,2	20,2	24,2	28,0	34,3	40,3
Max current	A	11,4	14,8	23,1	23,5	11,0	15,0	20,0	29,0	32,0	35,0	40,0	58,0	64,0	70,0
Current at start	A	47	61	100	114	66	101	130	130	145	175	141	143	161	194
SIZES AND WEIGHT															
Lenght	mm	660	660	600	600	600	600	600	600	600	600	1300	1300	1300	1300
Depth	mm	450	450	570	570	570	570	570	570	570	570	680	680	680	680
Height	mm	1112	1112	1220	1220	1220	1220	1220	1220	1220	1365	1220	1220	1220	1220
Weight	Kg	69	73	85	95	114	129	180	185	202	270	365	370	372	422
Lenght AP	mm	660	660	1000	1000	1000	1000	1000	1000	1000	-	-	-	-	-
Depth AP	mm	450	450	570	570	570	570	570	570	570	-	-	-	-	-
Height AP	mm	1112	1112	1220	1220	1220	1220	1220	1220	1220	-	-	-	-	-
Weight AP	Kg	115	118	129	136	181	196	248	253	268	-	-	-	-	-
VERSION WITH WATER VESSEL AND PUMP															
Contenence	l	30	30	70	70	70	70	70	70	70	-	-	-	-	-
Pump externe pressure	kPa	42	32	64	59	184	161	155	141	117	-	-	-	-	-
Pump power input	KW	0,09	0,09	0,21	0,21	0,37	0,37	0,37	0,37	0,37	-	-	-	-	-
Pump current input	A	0,4	0,4	1,0	1,0	3,0	3,0	1,4	1,4	1,4	-	-	-	-	-
EXPANSION VESSEL															
Volume	l	6,0	6,0	6,0	6,0	6,0	6,0	6,0	6,0	6,0	-	-	-	-	-
Max. water pressure	kPa	300	300	300	300	300	300	300	300	300	-	-	-	-	-
Nitrogen pre-charge pressure	kPa	150	150	150	150	150	150	150	150	150	-	-	-	-	-
Quantity	n°	1	1	1	1	1	1	1	1	1	-	-	-	-	-

(1) Cooling Operating conditions: plant exchanger water (inlet/outlet) 12/7 °C; ext.l source water temperature(inlet/outlet) 15/30 °C
(2) Heating Operating conditions: plant exchanger water (inlet/outlet 30/35 °C; ext. source water temperature (inlet/outlet) 15/10 °C
(3) Noise pressure according to ISO 3744
(4) Sound pressure at 1 meters in free field
* Consumptions refered to a single compressor
Water flow and pressure drop plant exchanger are calculated with clean water.
COP Referred to compressor only

RIVIERA-H HE

TECHNICAL DRAWINGS

RIVIERA-H 05-06/1

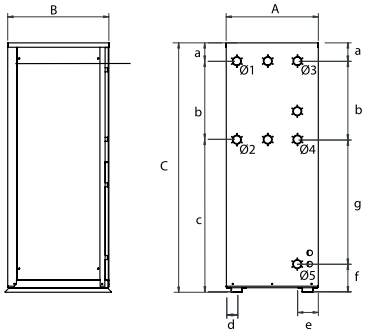

RIVIERA-H 14-19-25-29-36-151/1

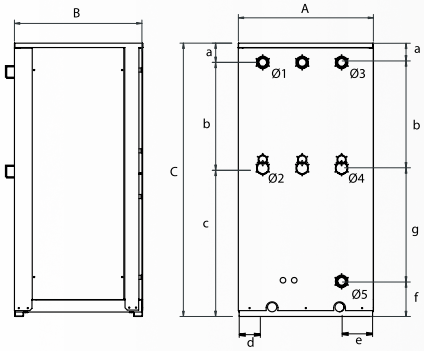

RIVIERA-H 092-102-122-152

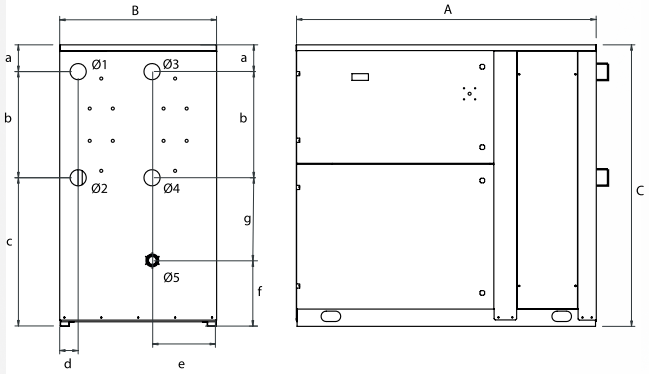

RIVIERA-H/AP 05-06/1

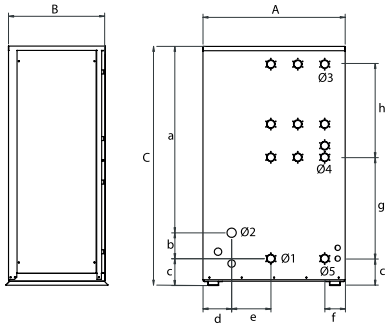

RIVIERA-H/AP 09-11-14-19-25-29-36/1

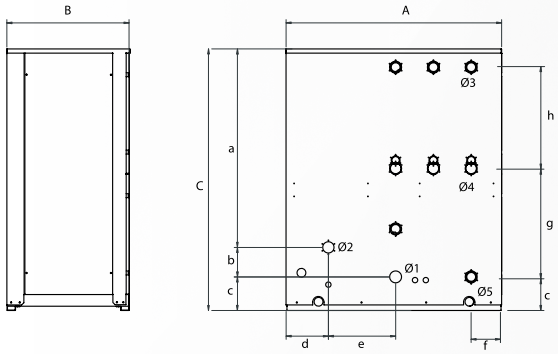

SYMBOLS LEGEND
Ø1 = plant exchanger inlet water
Ø2 = plant exchanger outlet water
Ø3 = well water inlet
Ø4 = well water outlet
Ø5 = not available

RIVIERA-H/STD

	A	B	C	a	b	c	d	e	f	g	h	i	Ø1	Ø2	Ø3	Ø4	Ø5
05-1	410	450	1112	83	433	596	65	83	433	100	409	-	¾" F	¾" F	¾" F	¾" F	¾" F
06-1	410	450	1112	83	433	596	65	83	433	100	409	-	¾" F	¾" F	¾" F	¾" F	¾" F
09-1	600	570	1220	87	471	661	109	87	471	505	156	-	1 ¼" F	1 ¼" F	1 ¼" F	1 ¼" F	1 ¼" F
11-1	600	570	1220	87	471	661	109	87	471	505	156	-	1 ¼" F	1 ¼" F	1 ¼" F	1 ¼" F	1 ¼" F
14-1	600	570	1220	87	471	661	109	87	471	505	156	-	1 ¼" F	1 ¼" F	1 ¼" F	1 ¼" F	1 ¼" F
19-1	600	570	1220	87	471	661	109	87	471	505	156	-	1 ¼" F	1 ¼" F	1 ¼" F	1 ¼" F	1 ¼" F
25-1	600	570	1220	87	471	661	109	87	471	505	156	-	1 ¼" F	1 ¼" F	1 ¼" F	1 ¼" F	1 ¼" F
29-1	600	570	1220	87	471	661	109	87	471	505	156	-	1 ¼" F	1 ¼" F	1 ¼" F	1 ¼" F	1 ¼" F
36-1	600	570	1220	87	471	661	109	87	471	505	156	-	1 ¼" F	1 ¼" F	1 ¼" F	1 ¼" F	1 ¼" F
151	600	570	1365	65	442	838	80	85	442	714	125	240	2"	2"	2"	2"	2"
092	1300	680	1220	116	460	624	80	116	460	360	284	280	2"	2"	2"	2"	2"
102	1300	680	1220	116	460	624	80	116	460	360	284	280	2"	2"	2"	2"	2"
122	1300	680	1220	116	460	624	80	116	460	360	284	280	2"	2"	2"	2"	2"
152	1300	680	1220	116	460	624	80	116	460	360	284	280	2"	2"	2"	2"	2"

RIVIERA-H/AP

	A	B	C	a	b	c	d	e	f	g	h	Ø1	Ø2	Ø3	Ø4	Ø5
05-1	660	450	1112	867	120	125	133	182	95	470	432	¾" F	¾" F	¾" F	¾" F	¾" F
06-1	660	450	1112	867	120	125	133	182	95	470	432	¾" F	¾" F	¾" F	¾" F	¾" F
09-1	660	450	1112	867	120	125	133	182	140	503	416	1 ¼" F	1 ¼" F	1 ¼" F	1 ¼" F	1 ¼" F
11-1	660	450	1112	867	120	125	133	182	140	503	416	1 ¼" F	1 ¼" F	1 ¼" F	1 ¼" F	1 ¼" F
14-1	1000	570	1220	927	137	156	196	312	140	503	416	1 ¼" F	1 ¼" F	1 ¼" F	1 ¼" F	1 ¼" F
19-1	1000	570	1220	927	137	156	196	312	140	503	416	1 ¼" F	1 ¼" F	1 ¼" F	1 ¼" F	1 ¼" F
25-1	1000	570	1220	927	137	156	196	312	140	503	416	1 ¼" F	1 ¼" F	1 ¼" F	1 ¼" F	1 ¼" F
29-1	1000	570	1220	927	137	156	196	312	140	503	416	1 ¼" F	1 ¼" F	1 ¼" F	1 ¼" F	1 ¼" F
36-1	1000	570	1220	927	137	156	196	312	140	503	416	1 ¼" F	1 ¼" F	1 ¼" F	1 ¼" F	1 ¼" F

NOTES

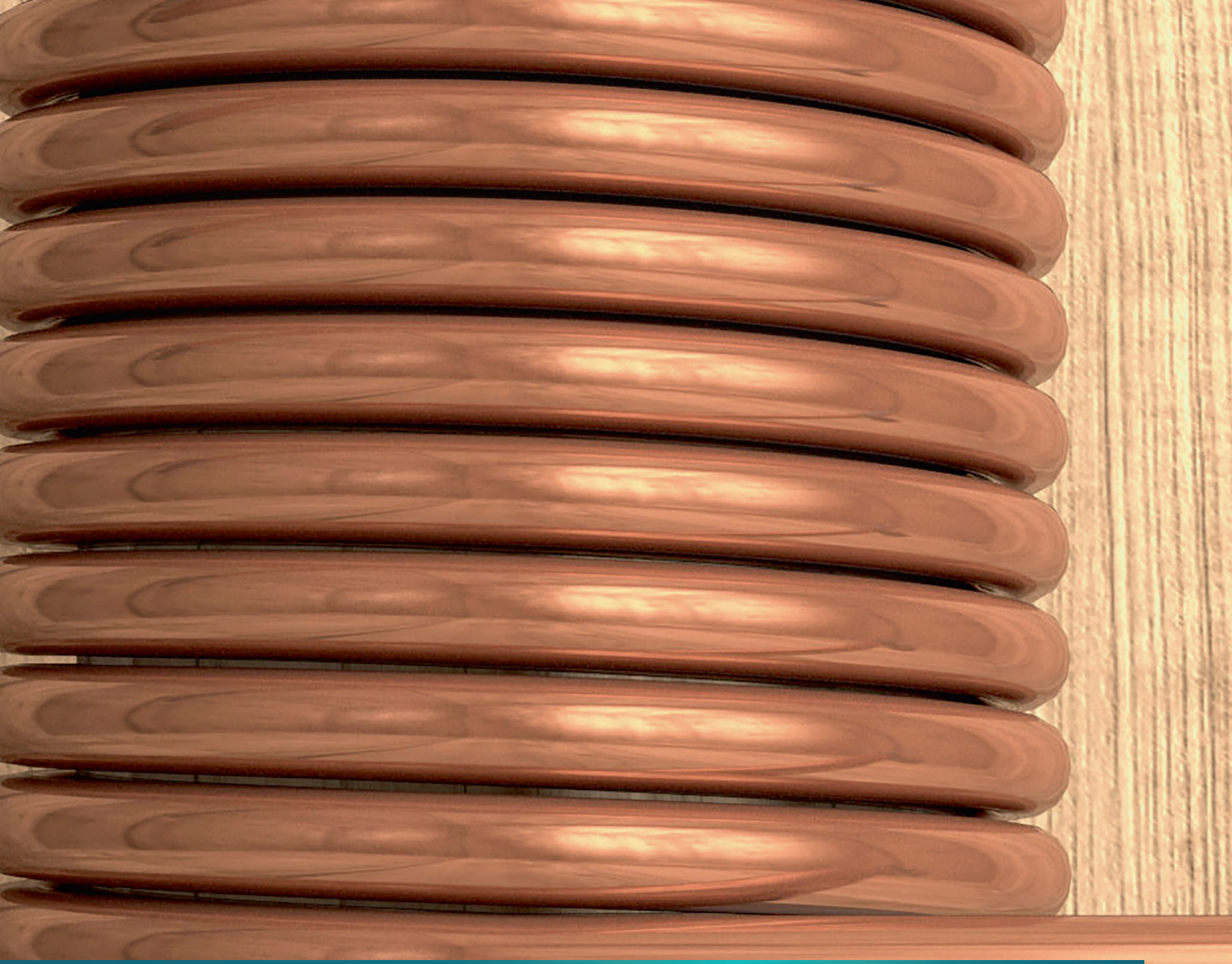

BUFFER TANKS

NATISSA PAGE 88

CELLINA PAGE 90

SOANNA PAGE 92

BRENTA PAGE 98

FIASTRA PAGE 102

TENNA PAGE 106

VERTICAL TANKS - COOLING



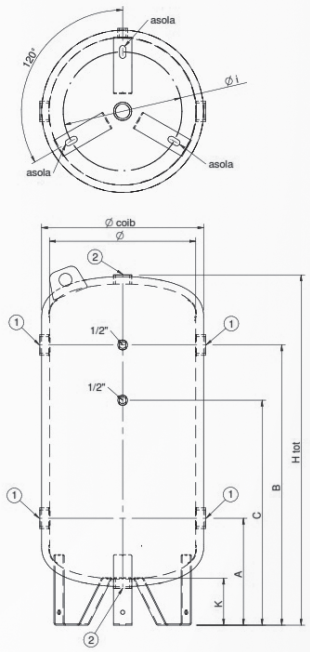

MADE IN ITALY

VERTICAL
M. Water Inlet/Outlet
C1. Safety valve
C2. Drain
S. Control instruments

NATISSA vertical/horizontal tanks
- Chilled water tank galvanized inside and out.
- Insulation with 20mm closed-cell elastomer foam sheet to stop condensation.
- Polyurethane PVC outer finish.
- Max. operating pressure: 9 bar.

VERTICAL TANKS

Code	Storage (lt)	Tank dimensions (mm)									Connection diameter (inches)		Weight (Kg)
		ø	ø coib	H tot	A	B	C	K	Øi	asola	1	2	
232VTC100	100	100	400	440	950	290	760	610	125	125	1" 1/2	1" 1/4	25
232VTC200	200	200	450	490	1340	295	1145	995	125	125	1" 1/2	1" 1/4	37
232VTC300	300	300	550	590	1425	365	1165	1015	130	130	2"	1" 1/4	48
232VTC500	500	500	650	690	1710	385	1435	1285	135	135	3"	1" 1/4	81
232VTC750	750	800	790	830	1740	395	1445	1295	125	125	3"	1" 1/2	110
232VTC1K0	1000	1000	850	890	2026	410	1710	1560	120	120	3"	1" 1/2	135
232VTC1K5	1500	1500	1000	1040	2160	500	1800	1650	165	165	3"	2"	192
232VTC2K0	2000	2000	1100	1140	2480	505	2105	1955	155	155	3"	2"	264
232VTC2K5	2500	2500	1250	1290	2275	565	1865	1715	180	180	4"	2"	281
232VTC3K0	3000	3000	1250	1290	2775	565	2365	2215	180	180	4"	2"	331
232VTC4K0	4000	4000	1400	1440	2845	590	2390	2240	160	160	4"	2"	496
232VTC5K0	5000	5000	1600	1640	2885	600	2400	2250	140	140	4"	2"	587

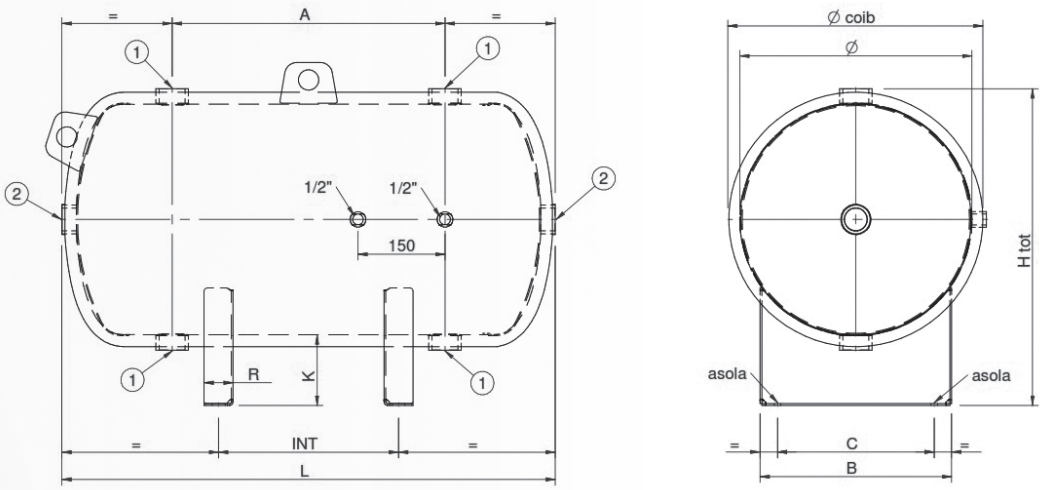

HORIZONTAL
M. Water Inlet/Outlet
C1. Safety valve
C2. Drain
S. Control instruments

HORIZONTAL TANKS

Code	Storage (lt)	Tank dimensions (mm)											Connection diameter (inches)		Weight (Kg)
		ø	ø coib	H tot	L	INT	A	B	C	K	R	asola	1	2	
232HTC100	100	400	440	546	850	310	470	330	270	120	50	22x11	1" 1/2	1" 1/4	25
232VTC200	200	450	490	596	1240	700	850	350	290	120	50	22x11	1" 1/2	1" 1/4	37
232VTC300	300	550	590	718	1320	600	800	425	365	140	50	22x11	2"	1" 1/4	48
232VTC500	500	650	690	875	1600	900	1050	490	410	190	70	22x11	3"	1" 1/4	81
232VTC750	800	790	830	1015	1642	900	1050	615	555	190	70	22x11	3"	1" 1/2	110
232VTC1K0	1000	850	890	1075	1932	1130	1300	660	570	190	70	35x17	3"	1" 1/2	135
232VTC1K5	1500	1000	1040	1225	2010	950	1300	775	685	190	120	35x17	3"	2"	192
232VTC2K0	2000	1100	1140	1335	2356	1320	1800	900	710	200	120	35x17	3"	2"	264
232VTC2K5	2500	1200	1240	1460	2416	1180	1600	950	810	225	120	35x17	4"	2"	281
232VTC3K0	3000	1250	1290	1510	2626	1390	1800	965	825	225	120	35x17	4"	2"	331
232VTC4K0	4000	1400	1440	1660	2716	1380	1800	1080	900	225	120	50x21	4"	2"	496
232VTC5K0	5000	1600	1640	1860	2776	1380	1800	1165	1095	225	120	50x21	4"	2"	587

CELLINA

COOLING/HEATING WATER TANKS

BUFFER TANKS - COOLING/HEATING

	Temperature	Pressure
Buffer CELLINA	-10 / +90°C	5 bar

The Vertical Inertial Hot/Cold water Tanks are generally installed in plants where both hot and chilled technological water has to be stored.
They have been specially designed for coupling to heat pumps and chillers. The main couplings are indeed large-sized to allow for high flow rates pass through.
A set of auxiliary couplings are also available to meet any plant demands. Double-layer insulation is provided. The first layer is made of 10 mm closed-cell elastomeric foam preventing the formation of condensate, whereas the second layer is 40 mm polyurethane foam to minimize loss of heat.
The whole tank is covered by a coloured PVC casing.



MADE IN ITALY

Size Table

	Di	d	Htot	A	B	C	E	F	I	K
234BTC100	500	400	975	285	445	605	795	-	-	124,5
234BTC200	550	450	1365	320	580	850	1120	-	-	125
234BTC300	650	550	1450	325	425	1035	1185	635	835	130
234BTC500	750	650	1735	375	685	1295	1445	780	980	135
234BTC800	890	790	1785	395	685	1295	1445	820	1020	125
234BTC1K0	950	850	2050	410	950	1560	1710	950	1150	120
234BTC1K5	1100	1000	2185	500	1040	1650	1800	1020	1220	165
234BTC2K0	1200	1100	1505	505	1345	1955	2105	1180	1380	155

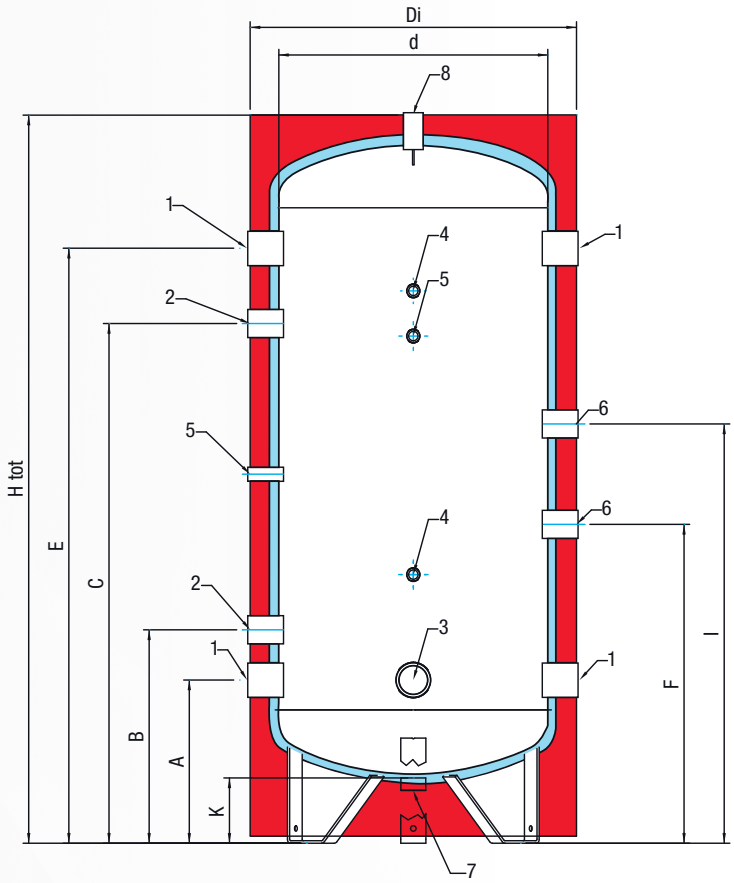

ACCESSORIES

Couplings

Code	Storage (lt)	Tank dimensions (mm)							
		1	**2**	**3**	**4**	**5**	**6**	**7**	**8**
234BTC100	100	1"½	1"½	2"	½"	-	-	1"¼	1"
234BTC200	200	1"½	1"½	2"	½"	-	-	1"¼	1"
234BTC300	300	2"	1"½	2"	½"	½"	1"½	1"¼	1"
234BTC500	500	3"	2"	2"	½"	½"	2"	1"¼	1"
234BTC800	800	3"	2"	2"	½"	½"	2"	1"¼	1"
234BTC1K0	1000	3"	2"	2"	½"	½"	2"	1"¼	1"
234BTC1K5	1500	3"	2"	2"	½"	½"	2"	1"¼	1"
234BTC2K0	2000	3"	2"	2"	½"	½"	2"	1"¼	1"

Coupling key

1	Plant and primary circuit delivery and return	**5**	Probe holder
2	Auxiliary circuit	**6**	Low temperature circuits
3	Additional resistor	**7**	Drain
4	Resistor thermostat	**8**	Pressure relief valve

SOANNA

Vessel volume 100 l up to 1300 l.
Pump section assembled in a in a powder painted galvanized steel supporting frame with cover panels. The water vessel is suitable for on-line connection to the chiller evaporator and the user plant or for a closed loop connection to the chiller evaporator only. Pump section may include one or two pumps on demand. It includes: one or two off centrifugal pumps (several sizes according to the performance required by the chiller unit), water vessel, flow switch, water fill and drain connections, expansion vessel, air purge valve, pump service valves and el. connection terminal board.



MADE IN ITALY

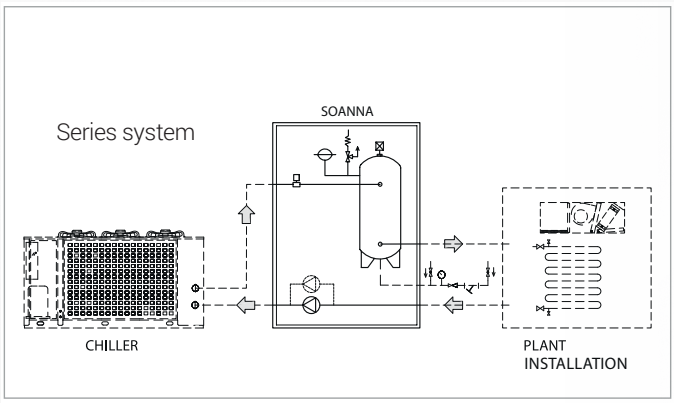

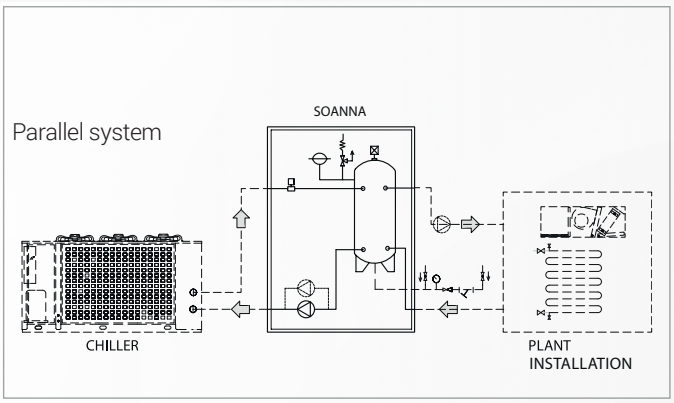

TECHNICAL DATA

SOANNA CONNECTIONS		SERIAL									PARALLEL				
		SOA 100			SOA 200						SOA 100		SOA 200		
		SA	SB	SC	SA	SB	SC	SD	SE	SF	PA	PB	PA	PB	PC
Vessel volume	l	100	100	100	200	200	200	200	200	200	100	100	200	200	200
Pump quantity	n°	1 (2 stand by)			1 (2 stand by)						1 (2 stand by)		1 (2 stand by)		
MAX water flow	m³/s	1,39	1,67	1,67	1,67	1,67	4,03	4,03	4,03	4,03	1,39	1,67	1,67	2,92	1,03
Externe pressure	kPa	42,5	61	206	61	206	85	147	194	264	42,5	61	61	80	85
MIN water flow	m³/s	0,55	0,55	0,55	0,55	0,55	1,81	1,81	1,81	1,81	1,55	1,55	1,55	1,81	1,81
Externe pressure	kPa	148	186	315	186	315	168	223	283	343	148	148	186	113	168
Pump voltage	kW	0,37	0,37	0,75	0,37	0,75	0,75	1,5	1,5	2,2	0,37	0,37	0,37	0,55	0,75
Supply voltage	V/Hz/Ph	230/1/50	400/3/50		400/3/50						400/3/50		400/3/50		
Lenght	mm	798	798	1307	1307	1307	1307	1307	1307	1307	798	798	1307	1307	1307
Depth	mm	549	549	549	759	759	759	759	759	759	549	549	795	795	795
Height	mm	1172	1172	1172	1700	1700	1700	1700	1700	1700	1172	1172	1700	1700	1700
Weight	Kg	145	145	159	215	215	238	241	278	280	45	145	215	235	238

SOANNA CONNECTIONS		SERIAL													PARALLEL					
		SOA 300						SOA 500				SOA 1300			SOA 300			SOA 500	SOA 1300	
		SA	SB	SC	SD	SE	SF	SA	SB	SC	SD	SA	SB	SC	PA	PB	PC	PA	PA	PB
Vessel volume	l	300	300	300	300	300	300	500	500	500	500	1300	1300	1300	300	300	300	500	1300	1300
Pump quantity	n°	1 (2 stand by)						1 (2 stand by)				1 (2 stand by)			1 (2 stand by)					
MAX water flow	m³/s	1,67	1,67	4,03	4,03	4,03	4,03	6,53	6,53	6,53	6,53	7,5	13,3	20,8	1,67	2,92	4,03	6,53	7,5	13,3
Externe pressure	kPa	61	206	85	147	194	264	122,5	197	258	318	196	160	169	61	80	85	87	157	98
MIN water flow	m³/s	0,55	0,55	1,81	1,81	1,81	1,81	4,03	4,03	4,03	4,03	4,2	8,3	10,5	0,55	1,81	1,81	4,03	4,2	8,3
Externe pressure	kPa	186	315	168	223	283	343	147	247	302	357	257	218	246	186	113	168	132	221,5	146,5
Pump voltage	kW	0,37	0,75	0,75	1,5	1,5	2,2	1,5	2,2	3	4	2,2	4	7,5	0,37	0,55	0,75	1,5	1,5	2,2
Supply voltage	V/Hz/Ph	400/3/50						400/3/50				400/3/50			400/3/50					
Lenght	mm	1307	1307	1307	1307	1307	1307	1434	1434	1434	1434	2095	2095	2095	137	137	137	1434	2095	2095
Depth	mm	795	795	795	795	795	795	934	934	934	934	2105	2105	2105	795	795	795	934	2105	2105
Height	mm	1700	1700	1700	1700	1700	1700	2006	2006	2006	2006	2118	2118	2118	1700	1700	1700	2600	2118	2118
Weight	Kg	225	225	248	252	288	290	405	422	436	440	730	730	730	225	246	248	404	758	785

SOANNA

100-200-300 LITERS

			Model	Code	Pomp n°	Water flow min/max-liters	External pressure kPa	Pump abs. Power kW	Supply voltage V / Ph / Hz	Lenght L	Width W	Height H	Weight Kg
SERIES connection	100 liters	1 pump	KAP 100 - 1 SA	**KAP0101SA**	1	0,55/1,39	148/42,5	0,37	230/1/50	798	549	1172	135
			KAP 100 - 1 SB	**KAP0101SB**	1	0,55/1,67	186/61	0,37	400/3/50	798	549	1172	135
			KAP 100 - 1 SC	**KAP0101SC**	1	0,55/1,67	315/206	0,75	400/3/50	798	549	1172	146
		2 pumps	KAP 100 - 2 SA	**KAP0102SA**	2 (1 stand by)	0,55/1,39	148/42,5	0,37	230/1/50	798	549	1172	145
			KAP 100 - 2 SB	**KAP0102SB**	2 (1 stand by)	0,55/1,67	186/61	0,37	400/3/50	798	549	1172	145
			KAP 100 - 2 SC	**KAP0102SC**	2 (1 stand by)	0,55/1,67	315/206	0,75	400/3/50	798	549	1172	159
	200 liters	1 pump	KAP 200 - 1 SA	**KAP0201SA**	1	0,55/1,67	186/61	0,37	400/3/50	1307	795	1700	205
			KAP 200 - 1 SB	**KAP0201SB**	1	0,75/1,67	315/206	0,75	400/3/50	1307	795	1700	202
			KAP 200 - 1 SC	**KAP0201SC**	1	0,75/4,03	168/85	0,75	400/3/50	1307	795	1700	219
			KAP 200 - 1 SD	**KAP0201SD**	1	1,5/4,03	223/147	1,5	400/3/50	1307	795	1700	220
			KAP 200 - 1 SE	**KAP0201SE**	1	1,5/4,03	283/194	1,5	400/3/50	1307	795	1700	244
			KAP 200 - 1 SF	**KAP0201SF**	1	2,2/4,036	343/264	2,2	400/3/50	1307	795	1700	244
		2 pumps	KAP 200 - 2 SA	**KAP0202SA**	2 (1 stand by)	0,55/1,67	186/61	0,37	400/3/50	1307	795	1700	215
			KAP 200 - 2 SB	**KAP0202SB**	2 (1 stand by)	0,75/1,67	315/206	0,75	400/3/50	1307	795	1700	215
			KAP 200 - 2 SC	**KAP0202SC**	2 (1 stand by)	0,75/4,03	168/85	0,75	400/3/50	1307	795	1700	238
			KAP 200 - 2 SD	**KAP0202SD**	2 (1 stand by)	1,5/4,03	223/147	1,5	400/3/50	1307	795	1700	241
			KAP 200 - 2 SE	**KAP0202SE**	2 (1 stand by)	1,5/4,03	283/194	1,5	400/3/50	1307	795	1700	278
			KAP 200 - 2 SF	**KAP0202SF**	2 (1 stand by)	2,2/4,03	343/264	2,2	400/3/50	1307	795	1700	280
	300 liters	1 pump	KAP 300 - 1 SA	**KAP0301SA**	1	0,55/1,67	186/61	0,37	400/3/50	1307	795	1700	215
			KAP 300 - 1 SB	**KAP0301SB**	1	0,55/1,67	315/206	0,75	400/3/50	1307	795	1700	212
			KAP 300 - 1 SC	**KAP0301SC**	1	1,81/4,03	168/85	0,75	400/3/50	1307	795	1700	229
			KAP 300 - 1 SD	**KAP0301SD**	1	1,81/4,03	223/147	1,5	400/3/50	1307	795	1700	231
			KAP 300 - 1 SE	**KAP0301SE**	1	1,81/4,03	283/194	1,5	400/3/50	1307	795	1700	254
			KAP 300 - 1 SF	**KAP0301SF**	1	1,81/4,03	343/264	2,2	400/3/50	1307	795	1700	254
		2 pumps	KAP 300 - 2 SA	**KAP0302SA**	2 (1 stand by)	0,55/1,67	186/61	0,37	400/3/50	1307	795	1700	225
			KAP 300 - 2 SB	**KAP0302SB**	2 (1 stand by)	0,55/1,67	315/206	0,75	400/3/50	1307	795	1700	225
			KAP 300 - 2 SC	**KAP0302SC**	2 (1 stand by)	1,81/4,03	168/85	0,75	400/3/50	1307	795	1700	248
			KAP 300 - 2 SD	**KAP0302SD**	2 (1 stand by)	1,81/4,03	223/147	1,5	400/3/50	1307	795	1700	252
			KAP 300 - 2 SE	**KAP0302SE**	2 (1 stand by)	1,81/4,03	283/194	1,5	400/3/50	1307	795	1700	288
			KAP 300 - 2 SF	**KAP0302SF**	2 (1 stand by)	1,81/4,03	343/264	2,2	400/3/50	1307	795	1700	290
PARALLEL connection	100 liters	1 pump	KAP 100 - 1 PA	**KAP0101PA**	1	0,55/1,39	148/42,5	0,37	230/1/50	798	549	1172	135
			KAP 100 - 1 PB	**KAP0101PB**	1	0,55/1,67	148/61	0,37	400/3/50	798	549	1172	135
		2 pumps	KAP 100 - 2 PA	**KAP0102PA**	2 (1 stand by)	0,55/1,39	148/42,5	0,37	230/1/50	798	549	1172	145
			KAP 100 - 2 PB	**KAP0102PB**	2 (1 stand by)	0,55/1,67	148/61	0,37	400/3/50	798	549	1172	145
	200 liters	1 pump	KAP 200 - 1 PA	**KAP0201PA**	1	0,55/1,67	186/61	0,37	230/1/50	1307	795	1700	205
			KAP 200 - 1 PB	**KAP0201PB**	1	1,81/2,92	113/80	0,55	400/3/50	1307	795	1700	213
			KAP 200 - 1 PC	**KAP0201PC**	1	1,81/4,03	168/85	0,75	400/3/50	1307	795	1700	216
		2 pumps	KAP 200 - 2 PA	**KAP0202PA**	2 (1 stand by)	0,55/1,67	186/61	0,37	400/3/50	1307	795	1700	215
			KAP 200 - 2 PB	**KAP0202PB**	2 (1 stand by)	1,81/2,92	113/80	0,55	400/3/50	1307	795	1700	235
			KAP 200 - 2 PC	**KAP0202PC**	2 (1 stand by)	1,81/4,03	168/85	0,75	400/3/50	1307	795	1700	238
	300 liters	1 pump	KAP 300 - 1 PA	**KAP0301PA**	1	0,55/1,67	186,61	0,37	400/3/50	1307	795	1700	215
			KAP 300 - 1 PB	**KAP0301PB**	1	1,81/2,92	113/80	0,55	400/3/50	1307	795	1700	225
			KAP 300 - 1 PC	**KAP0301PC**	1	1,81/85	168/85	0,75	400/3/50	1307	795	1700	228
		2 pumps	KAP 300 - 2 PA	**KAP0302PA**	2 (1 stand by)	0,55/1,67	186/61	0,37	400/3/50	1307	795	1700	225
			KAP 300 - 2 PB	**KAP0302PB**	2 (1 stand by)	1,81/4,03	113/80	0,55	400/3/50	1307	795	1700	246
			KAP 300 - 2 PC	**KAP0302PC**	2 (1 stand by)	1,84/4,03	168/85	0,75	400/3/50	1307	795	1700	249

			Model	Code	EWH - EPH	EWE - EWR - EPR
SERIES connection	100 liters	1 pump	KAP 100 - 1 SA	**KAP0101SA**	14 - 19	13 - 16
			KAP 100 - 1 SB	**KAP0101SB**	14 - 19 - 25 - 29 - 36	13 - 16 - 22 - 26 - 32
			KAP 100 - 1 SC	**KAP0101SC**	25 - 29 - 36	22 - 26 - 32
		2 pumps	KAP 100 - 2 SA	**KAP0102SA**	14 - 19 - 25 - 29 - 36	13 - 16 - 22 - 26 - 32
			KAP 100 - 2 SB	**KAP0102SB**	14 - 19	13 - 16
			KAP 100 - 2 SC	**KAP0102SC**	25 - 29 - 36	22 - 26 - 32
	200 liters	1 pump	KAP 200 - 1 SA	**KAP0201SA**	14 - 19 - 25 - 29 - 36	13 - 16 - 22 - 26 - 32
			KAP 200 - 1 SB	**KAP0201SB**	25 - 29 - 36	22 - 26 - 32
			KAP 200 - 1 SC	**KAP0201SC**	092- 102 - 152	38 - 092-102-122-152
			KAP 200 - 1 SD	**KAP0201SD**	092- 102 - 152	38 - 092-102-122-152
			KAP 200 - 1 SE	**KAP0201SE**	092- 102 - 152	38 - 092-102-122-152
			KAP 200 - 1 SF	**KAP0201SF**	092- 102 - 152	38 - 092-102-122-152
		2 pumps	KAP 200 - 2 SA	**KAP0202SA**	14 - 19 - 25 - 29 - 36	13 - 16 - 22 - 26 - 32
			KAP 200 - 2 SB	**KAP0202SB**	25 - 29 - 36	22 - 26 - 32
			KAP 200 - 2 SC	**KAP0202SC**	092- 102 - 152	38 - 092-102-122-152
			KAP 200 - 2 SD	**KAP0202SD**	092- 102 - 152	38 - 092-102-122-152
			KAP 200 - 2 SE	**KAP0202SE**	092- 102 - 152	38 - 092-102-122-152
			KAP 200 - 2 SF	**KAP0202SF**	092- 102 - 152	38 - 092-102-122-152
	300 liters	1 pump	KAP 300 - 1 SA	**KAP0301SA**	14 - 19 - 25 - 29 - 36	13 - 16 - 22 - 26 - 32
			KAP 300 - 1 SB	**KAP0301SB**	25 - 29 - 36	22 - 26 - 32
			KAP 300 - 1 SC	**KAP0301SC**	092- 102 - 152	38 - 092-102-122-152
			KAP 300 - 1 SD	**KAP0301SD**	092- 102 - 152	38 - 092-102-122-152
			KAP 300 - 1 SE	**KAP0301SE**	092- 102 - 152	38 - 092-102-122-152
			KAP 300 - 1 SF	**KAP0301SF**	092- 102 - 152	38 - 092-102-122-152
		2 pumps	KAP 300 - 2 SA	**KAP0302SA**	14 - 19 - 25 - 29 - 36	13 - 16 - 22 - 26 - 32
			KAP 300 - 2 SB	**KAP0302SB**	25 - 29 - 36	22 - 26 - 32
			KAP 300 - 2 SC	**KAP0302SC**	092- 102 - 152	38 - 092-102-122-152
			KAP 300 - 2 SD	**KAP0302SD**	092- 102 - 152	38 - 092-102-122-152
			KAP 300 - 2 SE	**KAP0302SE**	092- 102 - 152	38 - 092-102-122-152
			KAP 300 - 2 SF	**KAP0302SF**	092- 102 - 152	38 - 092-102-122-152
PARALLEL connection	100 liters	1 pump	KAP 100 - 1 PA	**KAP0101PA**	14 - 19	13 - 16
			KAP 100 - 1 PB	**KAP0101PB**	14 - 19 - 25 - 29 - 36	13 - 16 - 22 - 26 - 32
		2 pumps	KAP 100 - 2 PA	**KAP0102PA**	14 - 19	13 - 16
			KAP 100 - 2 PB	**KAP0102PB**	14 - 19 - 25 - 29 - 36	13 - 16 - 22 - 26 - 32
	200 liters	1 pump	KAP 200 - 1 PA	**KAP0201PA**	14 - 19 - 25 - 29 - 36	13 - 16 - 22 - 26 - 32
			KAP 200 - 1 PB	**KAP0201PB**	092 - 102	38 - 092-102
			KAP 200 - 1 PC	**KAP0201PC**	152	122-152
		2 pumps	KAP 200 - 2 PA	**KAP0202PA**	14 - 19 - 25 - 29 - 36	13 - 16 - 22 - 26 - 32
			KAP 200 - 2 PB	**KAP0202PB**	092 - 102	38 - 092-102
			KAP 200 - 2 PC	**KAP0202PC**	152	122-152
	300 liters	1 pump	KAP 300 - 1 PA	**KAP0301PA**	14 - 19 - 25 - 29 - 36	13 - 16 - 22 - 26 - 32
			KAP 300 - 1 PB	**KAP0301PB**	092 - 102	38 - 092-102
			KAP 300 - 1 PC	**KAP0301PC**	152	122-152
		2 pumps	KAP 300 - 2 PA	**KAP0302PA**	14 - 19 - 25 - 29 - 36	13 - 16 - 22 - 26 - 32
			KAP 300 - 2 PB	**KAP0302PB**	092 - 102	38 - 092-102
			KAP 300 - 2 PC	KAP0302PC	152	122-152

SOANNA

500-1300 LITERS

			Model	Code	Pomp n°	Water flow min/ max-liters	External pressure kPa	Pump abs. Power kW	Supply voltage V / Ph / Hz	Lenght L	Width W	Height H	Weight Kg
SERIES connection	500 liters	1 pump	SOA 500 - 1 SA	**SOA0501SA**	1	4,03/6,53	147/122	1,5	400/3/50	1434	934	2006	376
			SOA 500 - 1 SB	**SOA0501SB**	1	4,03/6,53	247/197	2,2	400/3/50	1434	934	2006	386
			SOA 500 - 1 SC	**SOA0501SC**	1	4,03/6,53	302/258	3	400/3/50	1434	934	2006	391
			SOA 500 - 1 SD	**SOA0501SD**	1	4,03/6,53	357/318	4	230/1/50	1434	934	2006	391
		2 pumps	SOA 500 - 2 SA	**SOA0502SA**	2 (1 stand by)	4,03/6,53	147/122	1,5	400/3/50	1434	934	2006	405
			SOA 500 - 2 SB	**SOA0502SB**	2 (1 stand by)	4,03/6,53	247/197	2,2	400/3/50	1434	934	2006	422
			SOA 500 - 2 SC	**SOA0502SC**	2 (1 stand by)	4,03/6,53	302/258	3	400/3/50	1434	934	2006	436
			SOA 500 - 2 SD	**SOA0502SD**	2 (1 stand by)	4,03/6,53	357/318	4	400/3/50	1434	934	2006	440
	1300 liters	1 pump	SOA 1300 - 1 SA	**SOA1301SA**	1	4,2/7,5	257/196	2,2	400/3/50	2095	2105	2118	730
			SOA 1300 - 1 SB	**SOA1301SB**	1	8,3/13,3	218/160	4	400/3/50	2095	2105	2118	730
			SOA 1300 - 1 SC	**SOA1301SC**	1	10,5/20,8	246/169	7,5	400/3/50	2095	2105	2118	730
		2 pumps	SOA 1300 - 2 SA	**SOA1302SA**	2 (1 stand by)	4,2/7,5	257/196	2,2	400/3/50	2095	2105	2118	785
			SOA 1300 - 2 SB	**SOA1302SB**	2 (1 stand by)	8,3/13,3	218/160	4	400/3/50	2095	2105	2118	785
			SOA 1300 - 2 SC	**SOA1302SC**	2 (1 stand by)	10,5/20,8	246/169	7,5	400/3/50	2095	2105	2118	785
PARALLEL connection	500 liters	1 pump	SOA 500 - 1 PA	**SOA0501PA**	1	4,03/6,53	132/87	1,1	400/3/50	1434	934	2006	377
		2 pumps	SOA 500 - 2 PA	**SOA0502PA**	2 (1 stand by)	4,03/6,53	132/87	1,1	400/3/50	1434	934	2006	404
	1300 liters	1 pump	SOA 1300 - 1 PB	**SOA1301PA**	1	4,2/7,5	221,5/157	1,5	400/3/50	2095	2105	2118	785
			SOA 1300 - 1 PB	**SOA1301PB**	1	8,3/13,3	146,5/98	2,2	400/3/50	2095	2105	2118	785
		2 pumps	SOA 1300 - 2 PA	**SOA1302PA**	2 (1 stand by)	4,2/7,5	221,5/157	1,5	400/3/50	2095	2105	2118	785
			SOA 1300 - 2 PB	**SOA1302PB**	2 (1 stand by)	8,3/13,3	146,5/98	2,2	400/3/50	2095	2105	2118	785

			Model	Code	GALAXY - ZENIT
SERIES connection	500 liters	1 pump	SOA 500 - 1 SA	**SOA0501SA**	123-133-153-134
			SOA 500 - 1 SB	**SOA0501SB**	123-133-153-134
			SOA 500 - 1 SC	**SOA0501SC**	123-133-153-134
			SOA 500 - 1 SD	**SOA0501SD**	123-133-153-134
		2 pumps	SOA 500 - 2 SA	**SOA0502SA**	123-133-153-134
			SOA 500 - 2 SB	**SOA0502SB**	123-133-153-134
			SOA 500 - 2 SC	**SOA0502SC**	123-133-153-134
			SOA 500 - 2 SD	**SOA0502SD**	123-133-153-134
	1300 liters	1 pump	SOA 1300 - 1 SA	**SOA1301SA**	–
			SOA 1300 - 1 SB	**SOA1301SB**	154-126
			SOA 1300 - 1 SC	**SOA1301SC**	154-126
		2 pumps	SOA 1300 - 2 SA	**SOA1302SA**	–
			SOA 1300 - 2 SB	**SOA1302SB**	154-126
			SOA 1300 - 2 SC	**SOA1302SC**	154-126
PARALLEL connection	500 liters	1 pump	SOA 500 - 1 PA	**SOA0501PA**	123-133-153-134
		2 pumps	SOA 500 - 2 PA	**SOA0502PA**	123-133-153-134
	1300 liters	1 pump	SOA 1300 - 1 PA	**SOA1301PA**	–
			SOA 1300 - 1 PB	**SOA1301PB**	154-126
		2 pumps	SOA 1300 - 2 PA	**SOA1302PA**	–
			SOA 1300 - 2 PB	**SOA1302PB**	154-126

BRENTA

BOILERS FOR HOT SANITARY WATER

Boilers for hot sanitary water

The water vessel "BRENTA" are designed for hot water domestic heating to be used in communationt with heat pump units. Thanks to the large heat exchanger surface, the domestic water heating can be provided also with low water termperature Puits. The heat exchanger, designed with a special elliptic pipe which increase the water turbolence, allows an excellent heat transfer and high efficiency.
The steel made vessel are internally glass coated, according to DIN 4753 regulation, to ensure a good protection against corrosion. Insulation made with polyurethane foam 50 mm tickness and finishing with plastic grey covering.



MADE IN ITALY

Series BRENTA glass treated d.h.w. vessels with large surface heat exchanger for connection to heat pumps

STEEL MADE

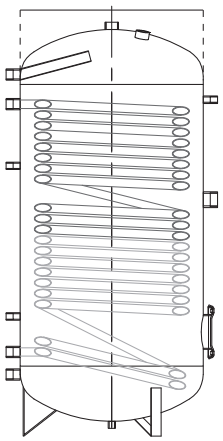

	Code	Model	Version	Height H	Weight Kg	Outside Ø mm	Storage lt
1 heat exchanger	**235BRN200**	BRENTA 200 W/1 HEAT EXCHANGER	steel made	1310	100	600	200
	235BRN300	BRENTA 300 W/1 HEAT EXCHANGER	steel made	1610	119	600	300
	235BRN500	BRENTA 500 W/1 HEAT EXCHANGER	steel made	1670	147	750	500
	235BRN750	BRENTA 750 W/1 HEAT EXCHANGER	steel made	2022	288	950	750
	235BRN1KO	BRENTA 1000 W/1 HEAT EXCHANGER	steel made	2028	342	990	1000
2 heat exchangers	**236BRN300**	BRENTA 300 W/2 HEAT EXCHANGERS	steel made	1610	119	600	200
	236BRN500	BRENTA 500 C/ 2 SERP. MAGGIORATI	steel made	1670	147	600	300
	236BRN750	BRENTA 750 W/2 HEAT EXCHANGERS	steel made	2022	288	750	500
	236BRN1KO	BRENTA 1000 W/2 HEAT EXCHANGERS	steel made	2028	342	990	750

TECHNICAL DATA

LEGEND

1	Temp. sensor location	½"	FL	Inspection flange	Ø180
2	Temp. sensor location	½"	RS	Water out (to the h. pump)	1"
3	Air vent	1"½	AS	Water in (from the h. pump)	1"
4	Electric element	1"½	AF	Domestic cold water in	1"
5	Temp. sensor location	½"	AC	Domestic hot water out	1"
6	Magnesium anode	1"½			
7	D.h.w. recirculation	1"			

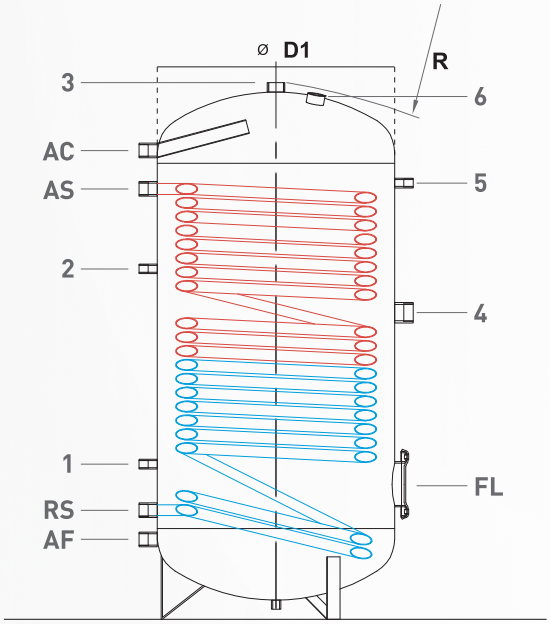

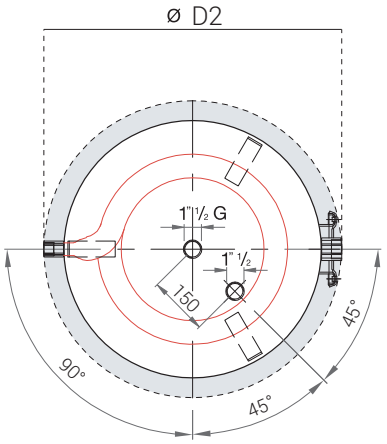

Heat exchanger pressure drops

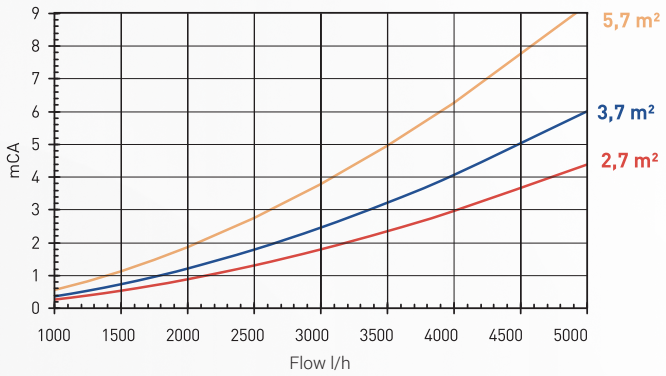

Advantages

- Quick d.h.w. heating
- Suitable for heat pump coupling
- High heat exchange efficiency
- Excellent solution for large power
- Excellent protection against corrosion thanks to the glass teatment according to DIN 4753

vessel BRENTA																	heat exchanger				
Liters	1	2	4	5	7	AF	AC	FL	Rs	As	Ø D1	Ø D2 with insulation	H - tank height	Ø D2 with 50 MM insulation	Overturning with insulation ≥	Max. operating temp. (C°)	Max. operating press. (Bar)	Exchanger (m²)	Contents exchanger (l.)	Max. operating press. (Bar)	Weight (Kg)
	395	750	969	757	1084	194	1154	330	274	1074	500	600	1310	1320	1450	95°	6	2,8	14,0	10	100
	395	750	1165	950	1390	194	1374	340	274	1264	500	600	1610	1620	1730	95°	6	3,7	18,0	10	119
	425	780	1170	985	1414	219	1414	370	299	1324	650	750	1670	1680	1840	95°	6	5,7	35,0	10	167
	646	1116	1496	1146	1496	216	1776	446	296	1322	750	950	2022	2090	2060	95°	6	7,7	47,0	10	288
	645	1352	1502	1152	1552	222	1782	432	302	1631	790	990	2028	2090	2065	95°	6	11,2	66,0	10	342

BRENTA

	Type		300	400	500
Tank capacity	Litres		250	375	430
Coil capacity	Litres		18	30	35
Non-heat consuming withdrawal: 15°C -40°C					
Withdrawal flow rate	Storage temperature 63°C	Flow rate (l/min)	14,9	16	15,6
Withdrawal time		Time (min)	23,75	32,67	35,92
Quantity of water withdrawn with these parameters		Litres	355	525	560
Withdrawal flow rate		Flow rate (l/min)	35,6	29,4	35
Withdrawal time		Time (min)	9,25	17,33	15,25
Quantity of water withdrawn with these parameters		Litres	330	510	535
Withdrawal flow rate		Flow rate (l/min)	48,5	50,8	54,3
Withdrawal time		Time (min)	5,67	9,25	9
Quantity of water withdrawn with these parameters		Litres	275	470	489
Withdrawal flow rate		Flow rate (l/min)	-	-	-
Withdrawal time		Time (min)	-	-	-
Quantity of water withdrawn with these parameters		Litres	-	-	-
Continuous withdrawal: 15°C-45°C					
Power	Flow temperature 80° C	kW	89	106	101
Withdrawal flow rate		l/h	2558	3032	2892
Primary circuit flow rate		m³/h	3	3,39	3,8
Power	Flow temperature 70° C	kW	64,5	90	91
Withdrawal flow rate		l/h	1845	2561	2615
Primary circuit flow rate		m³/h	2,7	3,5	3,3
Power	Flow temperature 60° C	kW	58	55	54,5
Withdrawal flow rate		l/h	1673	1571	1560
Primary circuit flow rate		m³/h	2,83	3,2	4
Power	Flow temperature 50° C	kW	29,5	22,5	37
Withdrawal flow rate		l/h	841	648	1063
Primary circuit flow rate		m³/h	2,86	2,7	4,2
Pressure drops					
Fixed internal exchanger	Water column (m)		9,6	5,6	5,8
	Flow rate (l/h)		3000	4380	4380

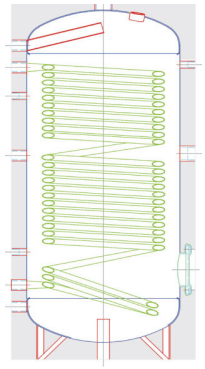

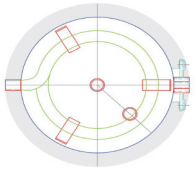

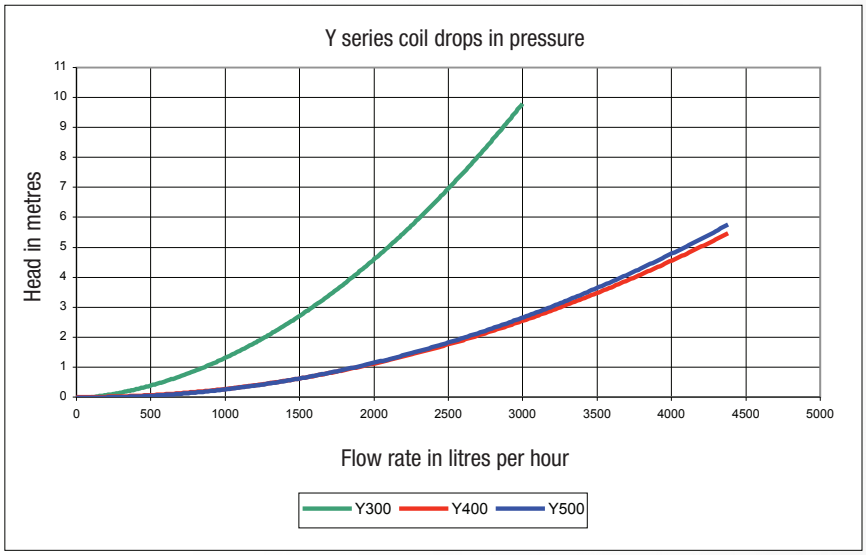

				Type	300	500	750	1000
				Tank capacity	Litres	235	425	702	786
				Maximum coil capacity	Litres	23	28	38	41
				Minimum coil capacity	Litres	6	13	16	19
Non-heat consuming withdrawal: 15°C -40°C									
Fixed upper exchanger	Withdrawal flow rate	UPPER COIL Storage temperature 63°C		Flow rate (l/min)	14,9	14,8	-	-
	Withdrawal time			Time (min)	18	24,5	-	-
	Q.ty of water withdrawn with these parameters			Litres	268	363	-	-
	Withdrawal flow rate			Flow rate (l/min)	32,4	32,3	33,4	32
	Withdrawal time			Time (min)	7	11,25	19	20,25
	Q.ty of water withdrawn with these parameters			Litres	235	364	632	646
	Withdrawal flow rate			Flow rate (l/min)	-	-	-	47,9
	Withdrawal time			Time (min)	-	-	-	13,6
	Q.ty of water withdrawn with these parameters			Litres	-	-	-	650
	Withdrawal flow rate			Flow rate (l/min)	-	-	-	-
	Withdrawal time			Time (min)	-	-	-	-
	Q.ty of water withdrawn with these parameters			Litres	-	-	-	-
Fixed lower exchanger	Withdrawal flow rate	LOWER COIL Storage temperature 63°C		Flow rate (l/min)	15	-	-	-
	Withdrawal time			Time (min)	23	-	-	-
	Q.ty of water withdrawn with these parameters			Litres	342	-	-	-
	Withdrawal flow rate			Flow rate (l/min)	31	33,25	31,6	32,25
	Withdrawal time			Time (min)	11	20	37	39,6
	Q.ty of water withdrawn with these parameters			Litres	340	665	1169	1276
	Withdrawal flow rate			Flow rate (l/min)	-	46	49,4	47,3
	Withdrawal time			Time (min)	-	13,5	22,5	26,8
	Q.ty of water withdrawn with these parameters			Litres	-	620	1111	1267
	Withdrawal flow rate			Flow rate (l/min)	-	-	-	-
	Withdrawal time			Time (min)	-	-	-	-
	Q.ty of water withdrawn with these parameters			Litres	-	-	-	-
Continuous withdrawal: 15°C-45°C								
Fixed upper exchanger	Power	Flow temperature 80° C		kW	89	97	100	123
	Withdrawal flow rate			l/h	2555	2776	2869	3535
	Primary circuit flow rate			m³/h	3,3	4	2,6	3,8
	Power	Flow temperature 70° C		kW	59	77	93	95
	Withdrawal flow rate			l/h	1680	2198	2660	2720
	Primary circuit flow rate			m³/h	3,3	3,5	3,6	3,6
	Power	Flow temperature 60° C		kW	42	55	67	67
	Withdrawal flow rate			l/h	1213	1563	1909	1914
	Primary circuit flow rate			m³/h	3,5	3,7	3,8	3,8
	Power	Flow temperature 50° C		kW	18	21	26	33
	Withdrawal flow rate			l/h	525	616	731	959
	Primary circuit flow rate			m³/h	1,9	1,9	2,3	2,9
Fixed lower exchanger	Power	Flow temperature 80° C		kW	19	47	74	83
	Withdrawal flow rate			l/h	534	1335	2110	2385
	Primary circuit flow rate			m³/h	2	3,5	3,5	3,4
	Power	Flow temperature 70° C		kW	13	30	57	60
	Withdrawal flow rate			l/h	363	845	1628	1716
	Primary circuit flow rate			m³/h	2	2,7	3,5	3,4
	Power	Flow temperature 60° C		kW	8	20	36	38
	Withdrawal flow rate			l/h	241	562	1025	1102
	Primary circuit flow rate			m³/h	2	1,8	3	3,4
	Power	Flow temperature 50° C		kW	4	13	20	18
	Withdrawal flow rate			l/h	104	364	566	504
	Primary circuit flow rate			m³/h	2	1,8	1,9	1,7
Pressure drops								
	Fixed upper exchanger			Exchange (m²)	3,7	0,6	6	6,5
	Fixed lower exchanger			Exchange (m²)	0,8	1,4	2,4	2,9

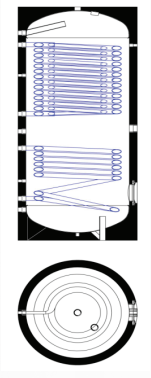

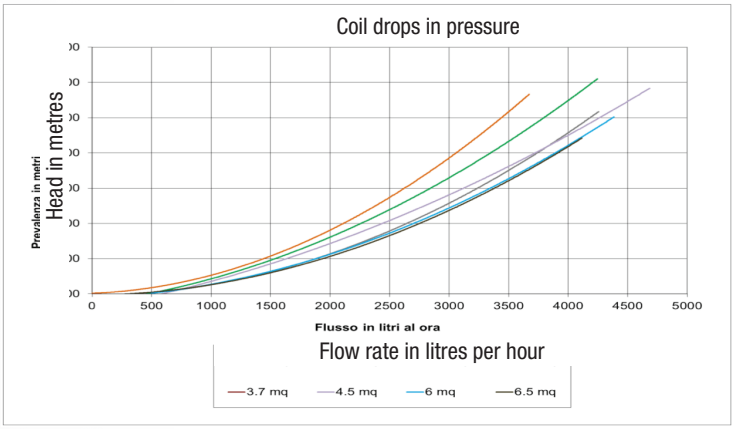

FIASTRA

COMBI BOILER FIASTRA/S1/S2

Vertical tank boiler with single exchanger

FIASTRA/ S1 / S2 domestic hot water vertical tank boiler.

These consist of steel tanks with an integral coil exchanger for heating the domestic water inside, and aresuitable both for boiler heating in traditional systems and for integration with solar collectors. The internal surfaces have been subject to vitrification treatments. Insulation is provided via rigid polyurethane foam for models of up to 500 l capacities, and soft polyurethane foam for larger models; the external casing is made of PVC. A side flange is provided for mounting an additional exchanger, enabling a second energy source to be used. The tanks are insulated and are suitable for generating and storing large volumes of domestic hot water.



TECHNICAL DATA

- Steel tank construction (FeP11)
- Max operating pressure: 6 bar
- Max exchanger operating pressure: 9 bar
- Max operating temperature: 90°C
- Threaded attachments for the various hydraulic connections
- Threaded attachment for electric heating element
- Standard magnesium protection anode
- 5-years guarantee

MADE IN ITALY

Description		MODELS			
		200	300	500	1000
Boiler type		vitrified	vitrified	vitrified	vitrified
Capacity	l	200	300	500	1000
Internal diameter	Di (mm)	500	550	600	790
External diameter	De (mm)	600	650	700	990
Height	mm	1320	1530	1965	2040
Topple height	mm	1450	1670	2085	2260
EXCHANGER					
Exchanger surface	mq	0,85	1,5	1,8	3
Exchanger power *	KW	27,2	45	52,2	72
DHW production (at 45° C) *	l/h	668	1106	1283	1769
Exchanger flow	m³/h	2	2	3	3
Exchanger pressure drops	mbar	75	108	260	380
Exchanger capacity	l	5,2	9,2	11	18,5
DHW delivery (at 45° C) **	l/10 min	358	548	853	1605
Reheating time **	min	15	14	21	32
Max Boiler Operating Press.	bar	6	6	6	6
Max Exchanger Operating Press.	bar	9	9	9	9
Max Boiler Operating Temp.	°C	90	90	90	90
Max Exchanger Operating Temp.	°C	110	110	110	110
Weight	Kg	88	116	156	260

NOTE:
* Boiler temperature 80°C - Domestic water temperature (Ti = 10°C, Tu = 45°C)
** Boiler temperature 80°C - Domestic water temperature (Ti = 10°C, Tu = 45°C) - Water heater temperature 60°C

Series FIASTRA-S1 the vertical boilers with internal hard-set exchanger for the heating of sanitary water

STEEL MADE

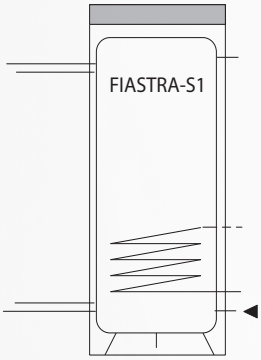

Code	Model	Version	Height H	Weight Kg	Outside Ø mm	Storage lt
237FIA200	GENIUS FIASTRA-S1 200 LT.	steel made	1320	88	600	200
237FIA300	GENIUS FIASTRA-S1 300 LT.	steel made	1530	116	650	300
237FIA500	GENIUS FIASTRA-S1 500 LT.	steel made	1965	156	700	500
237FIA1KO	GENIUS FIASTRA-S1 1000 LT.	steel made	2040	260	990	1000

Series FIASTRA-S2 the vertical boilers with 2 internal hard-set exchangers for the heating of sanitary water and additional of solar collector

STEEL MADE

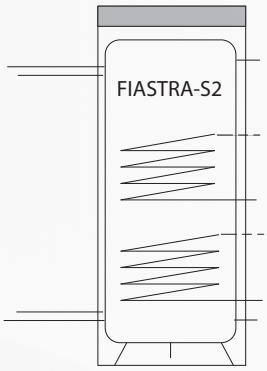

Code	Model	Version	Height H	Weight Kg	Outside Ø mm	Storage lt
238FIA200	GENIUS FIASTRA-S2 200 LT.	steel made	1320	95	600	200
238FIA300	GENIUS FIASTRA-S2 300 LT.	steel made	1530	125	650	300
238FIA500	GENIUS FIASTRA-S2 500 LT.	steel made	1965	170	750	500
238FIA1KO	GENIUS FIASTRA-S2 1000 LT.	steel made	2040	280	900	1000

FIASTRA

		Type		200	300	500	1000
Tank capacity		Litres		210	299	466	836
Coil capacity inferiore		Litres		6	10	14	22
Non-heat consuming withdrawal: 15°C -40°C							
Fixed lower exchanger	Withdrawal flow rate	LOWER COIL Storage temperature 63°C	Flow rate (l/min)	15,5	13,5	-	-
	Withdrawal time		Time (min)	17,08	30,83	-	-
	Q.ty of water withdrawn with these parameters		Litres	265	416	-	-
	Withdrawal flow rate		Flow rate (l/min)	31,9	33,3	28,6	-
	Withdrawal time		Time (min)	8,17	11,42	23,25	-
	Q.ty of water withdrawn with these parameters		Litres	261	381	665	-
	Withdrawal flow rate		Flow rate (l/min)	-	48,5	44,6	-
	Withdrawal time		Time (min)	-	7,25	14,42	-
	Q.ty of water withdrawn with these parameters		Litres	-	352	643	-
	Withdrawal flow rate		Flow rate (l/min)	-	-	-	65,9
	Withdrawal time		Time (min)	-	-	-	16,42
	Q.ty of water withdrawn with these parameters		Litres	-	-	-	1082
Continuous withdrawal: 15°C-45°C							
Fixed lower exchanger	Power	Flow temperature 80° C	kW	19	38	48	81
	Withdrawal flow rate		l/h	553	1092	1381	2332
	Primary circuit flow rate		m³/h	1	1,1	1,15	2,4
	Power	Flow temperature 70° C	kW	15	24	37	59
	Withdrawal flow rate		l/h	422	694	1121	1682
	Primary circuit flow rate		m³/h	1	1	1	2,4
	Power	Flow temperature 60° C	kW	13	18	17	50
	Withdrawal flow rate		l/h	377	524	484	1443
	Primary circuit flow rate		m³/h	1	1	1	2,4
	Power	Flow temperature 50° C	kW	-	-	-	-
	Withdrawal flow rate		l/h	-	-	-	-
	Primary circuit flow rate		m³/h	-	-	-	-
Pressure drops							
Fixed exchanger		Exchange (m²)		0,85	1,4	1,8	3

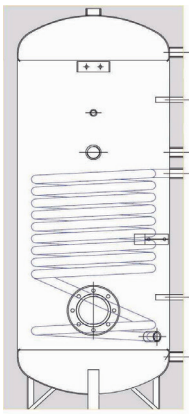

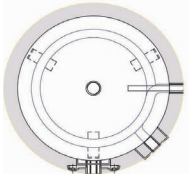

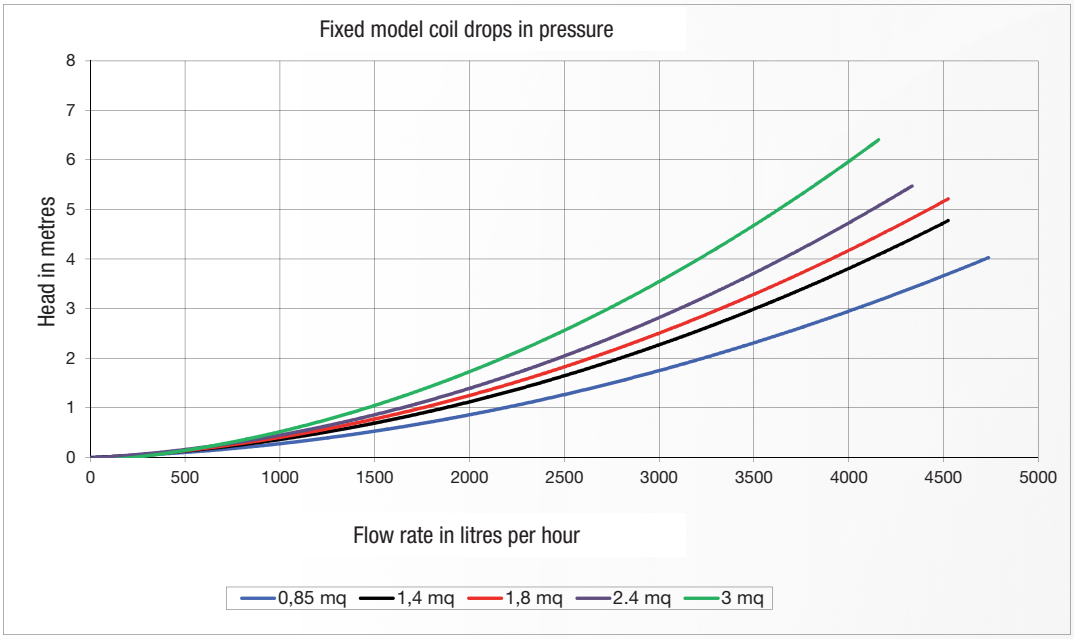

				Type	200	300	500	1000
				Tank capacity	Litres	206	295	458	818
				Maximum coil capacity	Litres	4	4	8	18
				Minimum coil capacity	Litres	6	10	14	22
Non-heat consuming withdrawal: 15°C -40°C									
Fixed upper exchanger	Withdrawal flow rate	LOWER COIL	Storage temperature 63°C	Flow rate (l/min)	14,8	13,2	18,4	-
	Withdrawal time			Time (min)	7,92	9,92	12,33	-
	Q.ty of water withdrawn with these parameters			Litres	117	131	227	-
	Withdrawal flow rate			Flow rate (l/min)	32,6	35,2	32	-
	Withdrawal time			Time (min)	3	3,83	7	-
	Q.ty of water withdrawn with these parameters			Litres	98	135	224	-
	Withdrawal flow rate			Flow rate (l/min)	-	-	49	47,8
	Withdrawal time			Time (min)	-	-	4,42	9,25
	Q.ty of water withdrawn with these parameters			Litres	-	-	217	3096
	Withdrawal flow rate			Flow rate (l/min)	-	-	-	70
	Withdrawal time			Time (min)	-	-	-	6,42
	Q.ty of water withdrawn with these parameters			Litres	-	-	-	450
Fixed lower exchanger	Withdrawal flow rate	LOWER COIL	Storage temperature 63°C	Flow rate (l/min)	15,5	13,5	-	-
	Withdrawal time			Time (min)	17,08	30,83	-	-
	Q.ty of water withdrawn with these parameters			Litres	265	416	-	-
	Withdrawal flow rate			Flow rate (l/min)	31,9	33,3	28,6	-
	Withdrawal time			Time (min)	8,17	11,42	23,25	-
	Q.ty of water withdrawn with these parameters			Litres	261	381	665	-
	Withdrawal flow rate			Flow rate (l/min)	-	48,5	44,6	-
	Withdrawal time			Time (min)	-	7,25	14,42	-
	Q.ty of water withdrawn with these parameters			Litres	-	352	643	-
	Withdrawal flow rate			Flow rate (l/min)	-	-	-	65,9
	Withdrawal time			Time (min)	-	-	-	16,42
	Q.ty of water withdrawn with these parameters			Litres	-	-	-	1082
Continuous withdrawal: 15°C-45°C								
Fixed upper exchanger	Power	Flow temperature	80° C	kW	13	16	33	57
	Withdrawal flow rate			l/h	360	471	942	1630
	Primary circuit flow rate			m³/h	1	1,1	1	2,3
	Power	Flow temperature	70° C	kW	11	12	22	46
	Withdrawal flow rate			l/h	301	365	642	1311
	Primary circuit flow rate			m³/h	1	1,1	1	2,3
	Power	Flow temperature	60° C	kW	7	9	15	33
	Withdrawal flow rate			l/h	200	264	427	944
	Primary circuit flow rate			m³/h	1	1	1	2,3
	Power	Flow temperature	50° C	kW	-	-	-	-
	Withdrawal flow rate			l/h	-	-	-	-
	Primary circuit flow rate			m³/h	-	-	-	-
Fixed lower exchanger	Power	Flow temperature	80° C	kW	19	38	48	81
	Withdrawal flow rate			l/h	553	1092	1381	2332
	Primary circuit flow rate			m³/h	1	1,1	1,15	2,4
	Power	Flow temperature	70° C	kW	15	24	37	59
	Withdrawal flow rate			l/h	422	694	1121	1682
	Primary circuit flow rate			m³/h	1	1	1	2,4
	Power	Flow temperature	60° C	kW	13	18	17	50
	Withdrawal flow rate			l/h	377	524	484	1443
	Primary circuit flow rate			m³/h	1	1	1	2,4
	Power	Flow temperature	50° C	kW	-	-	-	-
	Withdrawal flow rate			l/h	-	-	-	-
	Primary circuit flow rate			m³/h	-	-	-	-
Pressure drops								
Fixed upper exchanger				Exchange (m²)	0,6	0,6	1,2	2,4
Fixed lower exchanger				Exchange (m²)	0,85	1,4	1,8	3

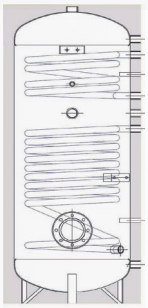

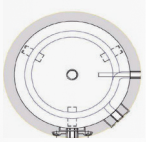

Fixed model coil drops in pressure

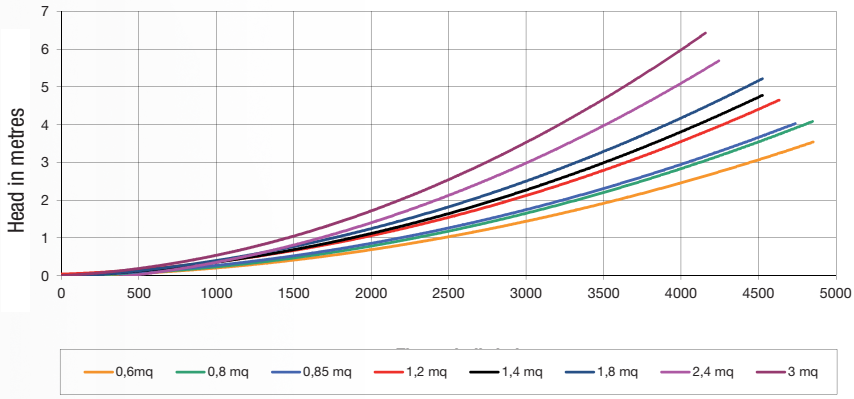

TENNA

COMBINED TANKS

Inertial storage with stratification

Inertial storage of heating water with temperature stratification and a corrugated stainless steel exchanger, for domestic hot water production. Models:

• A.I.C.S. / S1 (inertial storage combined with a stratification device, with an integral stainless steel exchanger for domestic hot water production + 1 integral coil exchanger for the solar power system).

• A.I.C.S. / S2 (inertial storage combined with a stratification device, with an ntegral stainless steel exchanger for domestic hot water production + 2 integral coil exchangers for the solar power system).

These steel tanks are ideal for storing large quantities of energy, in the form of hot water, generated principally using renewable sources. They can be used in support of systems based on gas or gasoil boilers, wood burners, heat pumps, solar installations and other sources of renewable energy. The integral temperature stratification device allows the water to be drawn off at the desired temperature; it is particularly suited to heating systems operating at low temperatures (radiant floor panels). Domestic hot water can be delivered immediately via the incorporated exchanger, comprising a special corrugated flexible hose made of stainless steel of ample surface area and cross-section.



TECHNICAL DATA

- Steel tank construction (RST 37 - 2)
- Max operating pressure for the heating circuit: 3 bar
- Max operating pressure for the exchangers: 9 bar
- Max operating pressure for the domestic circuit: 6 bar
- Max operating temperature: 90°C
- Threaded attachments for the various hydraulic connections
- Threaded attachment for electric heating element
- Soft polyurethane insulation with a PVC cover (provided as standard).

MADE IN ITALY

Description		MODELS		
		600	**1000**	**1500**
Boiler type		Buffer + DHW	Buffer + DHW	Buffer + DHW
Capacity	l	600	1000	1500
Internal diameter	Di (mm)	700	790	1000
External diameter	De (mm)	900	990	1200
Height	mm	1640	2050	2150
Topple height	mm	1670	2150	2220
LOWER EXCHANGER S1 (solar)				
Exchanger surface	mq	1,8	3	3,6
Exchanger flow	m³/h	440	520	830
Exchanger pressure drops	mbar	115	125	135
Exchanger capacity	l	11	18,5	22
UPPER EXCHANGER S2 (solar)				
Exchanger surface	mq	1,2	2,4	2,4
Exchanger flow	m³/h	420	460	460
Exchanger pressure drops	mbar	113	120	120
Exchanger capacity	l	7,4	14,8	14,8

Series TENNA hot water buffers tanks with domestic water heat exchanger

STEEL MADE

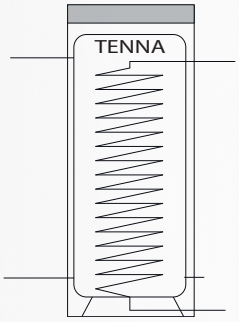

Code	Model	Version	Height H	Weight Kg	Outside Ø mm	Storage lt
240TEN080	GENIUS TENNA 600 LT.	steel made	1640	185	900	600
240TEN090	GENIUS TENNA 1000 LT.	steel made	2050	275	990	1000
240TEN100	GENIUS TENNA 1500 LT.	steel made	2150	344	1200	1500

Series TENNA S1 the combined tanks w/1 flexible hose in stainless steel aisi 3316L for hot sanitary water production and one internal hard-set exchanger for additional of solar collector

STEEL MADE

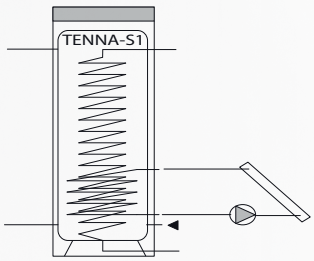

Code	Model	Version	Height H	Weight Kg	Outside Ø mm	Storage lt
242TEN110	GENIUS TENNA-S1 600 LT.	steel made	1640	185	900	600
242TEN120	GENIUS TENNA-S1 1000 LT.	steel made	2050	275	990	1000
242TEN130	GENIUS TENNA-S1 1500 LT.	steel made	2150	344	1200	1500

Series TENNA S2 the combined tanks with one flexible hose in stainless steel aisi 3316L for hot sanitary water production and two internal hard-set exchangers for additional of solar collector

STEEL MADE

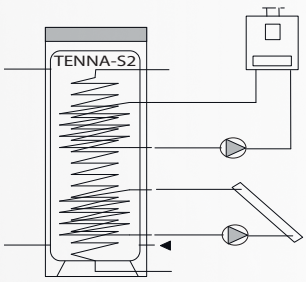

Code	Model	Version	Height H	Weight Kg	Outside Ø mm	Storage lt
243TEN140	GENIUS TENNA-S2 600 LT.	steel made	1640	185	900	600
243TEN150	GENIUS TENNA-S2 1000 LT.	steel made	2050	275	990	1000
243TEN160	GENIUS TENNA-S2 1500 LT.	steel made	2150	344	1200	1500

TENNA

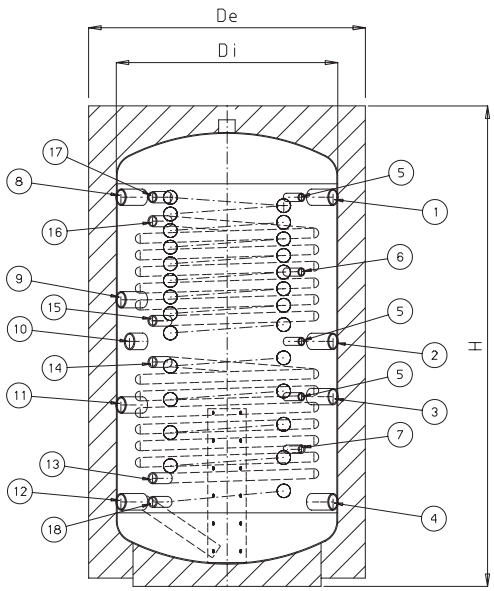

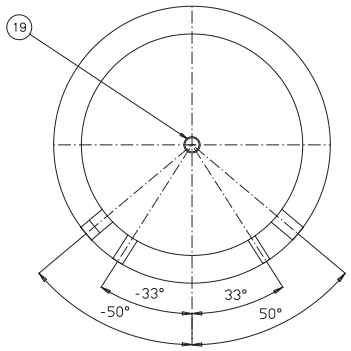

1. Additional heating source 2 IN (1" ½)
2. Heating system OUT (1" ½)
3. Additional heating source 2 OUT (½)
4. Heat pump OUT (1" ½)
5. Sensor fitting (½")
6. Fitting for upper solar sensor (½")
7. Fitting for lower solar sensor (½")
8. Additional heating source 1 IN (1" ½)
9. Heat pump IN (1" ½)
10. Electric heating element fitting (1" ½)
11. Additional heating source 1 OUT (1" ½)
12. Heating system IN (1" ½)
13. Solar plant OUT (1")
14. Solar plant IN (1")
15. Solar plant return (upper exchanger – 1")
16. Solar plant outlet (upper exchanger – 1")
17. Domestic hot water outlet (1")
18. Domestic cold water inlet (1")
19. Upper fitting (bleed - 1" ½)

Description		MODELS		
		600	**1000**	**1500**
Domestic hot water exchanger				
Exchanger surface	mq	5	7,5	9
Exchanger capacity	l	38	58	76
DHW production (at 45° C) *	l/h	1900	3400	3800
Exchanger pressure drops	mbar	160	180	200
Power exchanged *	KW	77,3	138,4	154,6
Max Operating Press. for the heating circuit	bar	3	3	3
Max Exch.Operating Press.	bar	49	9	9
Max Operating Temp.	°C	90	90	90
Weight	Kg	185	275	344

	Type		600	1000	1500
Tank capacity	Litres		495	800	1342
Coil capacity ACS	Litres		20	38	50
Non-heat consuming withdrawal: 15°C -40°C					
Withdrawal flow rate	Storage temperature 65°C	Flow rate (l/min)	15,4	-	-
Withdrawal time		Time (min)	26,9	-	-
Quantity of water withdrawn with these parameters		Litres	415	-	-
Withdrawal flow rate		Flow rate (l/min)	29,8	29,2	-
Withdrawal time		Time (min)	9,8	21,17	-
Quantity of water withdrawn with these parameters		Litres	293	618	-
Withdrawal flow rate		Flow rate (l/min)	-	50,7	-
Withdrawal time		Time (min)	-	9,92	-
Quantity of water withdrawn with these parameters		Litres	-	503	-
Withdrawal flow rate		Flow rate (l/min)	-	-	62,3
Withdrawal time		Time (min)	-	-	13,58
Quantity of water withdrawn with these parameters		Litres	-	-	846
Continuous withdrawal: 15°C-45°C					
Power	Flow temperature 80° C	kW	88	122	121
Withdrawal flow rate		l/h	2535	3505	3480
Primary circuit flow rate		m³/h	2	2	2
Power	Flow temperature 70° C	kW	61	89	89
Withdrawal flow rate		l/h	1761	2495	2556
Primary circuit flow rate		m³/h	2	2	2
Power	Flow temperature 60° C	kW	42	61	63
Withdrawal flow rate		l/h	1215	1752	1807
Primary circuit flow rate		m³/h	2	2	2
Power	Flow temperature 50° C	kW	15	31	31
Withdrawal flow rate		l/h	424	896	897
Primary circuit flow rate		m³/h	2	2	2
Pressure drops					
Fixed upper exchanger	Exchange (m²)		1,2	2,4	2,4
Fixed lower exchanger	Exchange (m²)		1,8	3	3,6
Coil for producing DHW (DN32 pipe)	Exchange (m²)		3,978	7,514	9,945

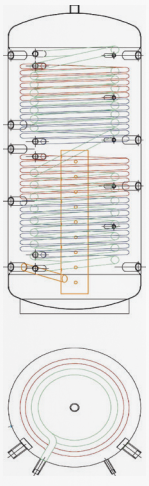

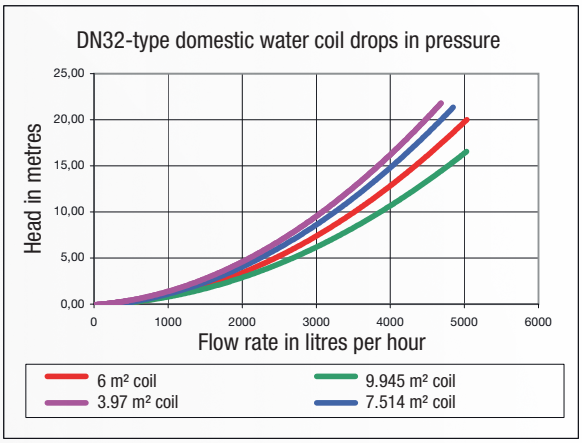

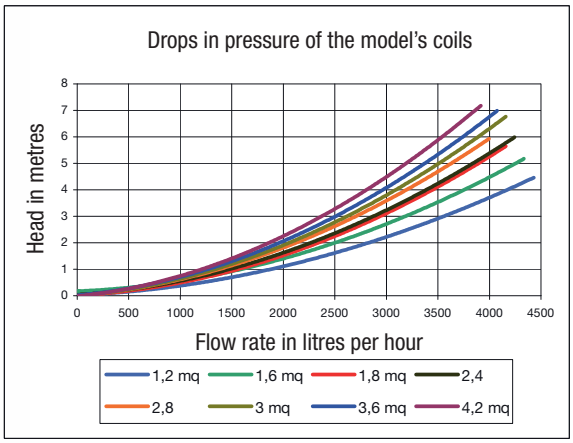

NOTES

INDUSTRIAL CLIMATIC GROUP is not responsible for possible mistakes of this catalogue and can change the present data without previous notice

KLT
KLIMA

HEADQUARTERS

Vējziedi 10, Dreiliņi, LV-2130, Latvia
Phone: +(371) 20009148
E-mail: info@icg-international.com